General Information
Usage of catalogue, Contact, Questionnaires, Order system — Chapter i

Dosing units and -systems — Chapter 1

Dosing- and feeding pumps — Chapter 2

Fittings — Chapter 3

Connection pieces and dosing hoses — Chapter 4

Appendix
Pump performance chart, Pump series overview, Resistance chart, Installation examples, Product documentation, GTC — Chapter 5

© 2015 **sera GmbH**
Subject to technical modifications.

© 2015 **sera GmbH**
Subject to technical modifications.

1. Table of contents

Please choose your product chapter in our table of contents

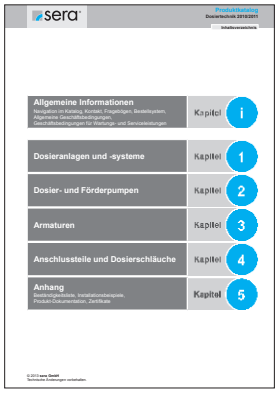

2. Chapter overview

Via the application, description and the range of capacity you will find the product overview.

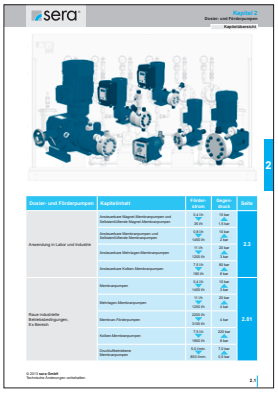

3. Product overview

Please choose here your type series according to the required range of capacity

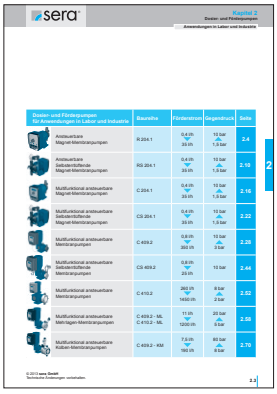

4. Product page

Please find here the technical data to the product.

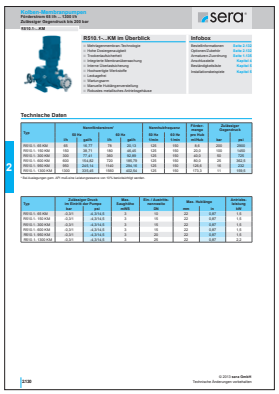

4. Dimensions

Please find here the dimensions to the product.

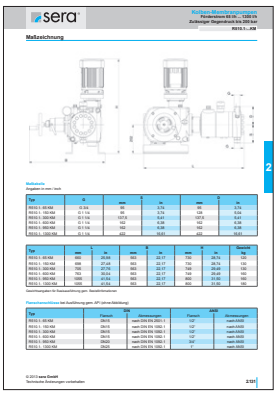

5. Order information

Basis product and the required options/accessories.

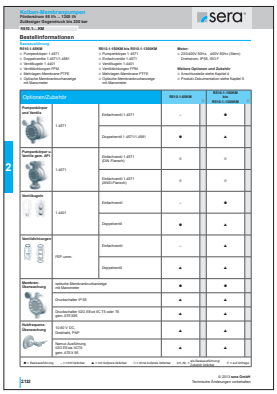

6. Allocation of fittings

Via the allocation of fittings you will find the pressure and the suction-sided fittings to the pump.

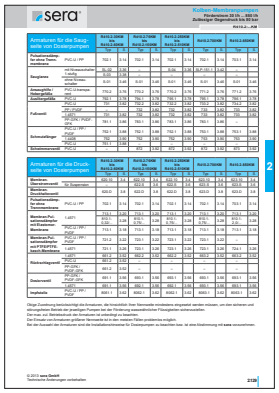

7. Connection pieces

Please choose here the correct connection pieces to the product (see chapter 4).

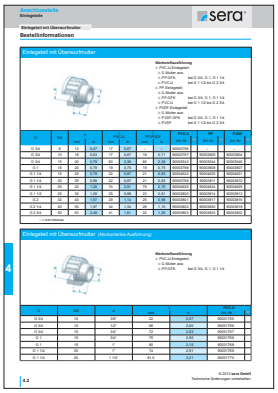

8. Installation examples

For pumps and fittings (see chapter 5).

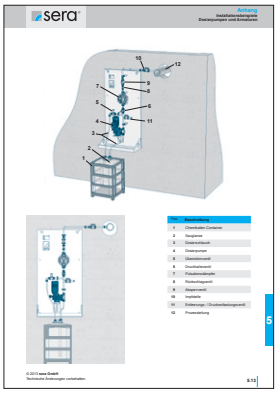

9. Resistance chart

Please choose the material suitable for the dosing medium with the help of the resistance chart (see chapter 5).

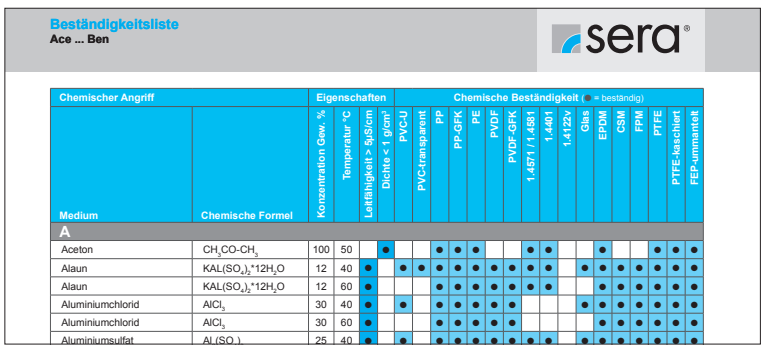

Beständigkeitsliste
Ace ... Ben

Chemischer Angriff		Eigenschaften			Chemische Beständigkeit (● = beständig)																
Medium	Chemische Formel	Konzentration Gew. %	Temperatur °C	Leitfähigkeit > 5µS/cm	Dichte < 1 g/cm³	PVC-U	PVC-transparent	PP	PP-GFK	PE	PVDF	PVDF-GFK	1.4571 / 1.4581	1.4401	1.4122v	Glas	EPDM	CSM	FPM	PTFE	PTFE-kaschiert	FEP-ummantelt
A																						
Aceton	$CH_3CO\text{-}CH_3$	100	50		●				●	●	●			●	●			●			●	●	●
Alaun	$KAL(SO_4)_2{*}12H_2O$	12	40	●		●	●	●	●	●	●	●	●	●		●	●	●	●	●	●	●	●
Alaun	$KAL(SO_4)_2{*}12H_2O$	12	60	●					●	●	●	●	●	●			●	●	●	●	●	●	●
Aluminiumchlorid	$AlCl_3$	30	40	●		●			●	●	●	●	●				●	●	●	●	●	●	●
Aluminiumchlorid	$AlCl_3$	30	60	●					●	●	●	●	●					●	●	●	●	●	●
Aluminiumsulfat	$Al_2(SO_4)$	25	40	●		●			●	●	●	●	●	●		●	●	●	●	●	●	●	●

© 2015 **sera GmbH**
Subject to technical modifications.

i

sera worldwide...

With subsidiaries in England and South Africa and a worldwide sales and service network with more than 30 overseas representatives in more than 80 countries on all continents, **sera** guarantees optimal local support of the customers.

Algeria
Angola
Argentina
Australia
Austria
Belgium
Bolivia
Bosnia and Herzegovina
Brazil
Bulgaria
Burundi
Byelorussia
Canada
Chile
China
Croatia
Czech Republic
Denmark
Ecuador
Egypt
Estonia
Finland
France
Great Britain
Greece
Hungary
Indonesia
Ireland
Israel
Italy
Japan
Kenya
Kongo
Latvia
Lithuania
Luxembourg
Mexico
Morocco
Netherlands
Norway
Paraguay
Peru
Philippines
Poland
Romania
Russia
Rwanda
Saudi Arabia
Serbia
Slovakia
Slovenia
South Africa
South Korea
Spain
Sweden
Switzerland
Taiwan
Thailand
Tunisia
Turkey
UAE
Ukraine
Uruguay
Venezuela
Vietnam

© 2015 **sera GmbH**
Subject to technical modifications.

i

Contact adress

sera ProDos GmbH
sera Straße 1
34376 Immenhausen
Germany

Contact

Department	Phone	Fax	E-Mail	Internet
Sales Consulting, technical support, Application Technology, Spare parts	+49 5673 999-02	+49 5673 999-03	info-prodos@sera-web.com	www.sera-web.com
Service Installation / commissioning, maintenance / repair, Customer Training	+49 5673 999-1880	+49 5673 999-1899	service@sera-web.com	

sera Service

Technical Support
At **sera**, there are trained specialist personnel available for you who are pleased to discuss your questions and comments about our products and to present you with solution concepts which are precisely customised to your individual requirements. In the discussion with us, you also obtain immediate support and error diagnostics. Because we would like to give you the best possible support immediately.

Installation and Commissioning
Experienced **sera** service technicians are available for the commissioning and installation of your purchased system. On request, the installation can also be carried out by your skilled personnel under the instruction of the **sera** service technician. Thus, early start-ups are possible and your personnel are best familiarised with the new system in the course of the installation. Cost-effective concepts for the optimisation or modernisation of the systems are also developed on request. Thus you receive optimum solutions from us in a short time and with low costs.

Maintenance- and Repair Service
Your installed **sera** systems are serviced and maintained by our experienced service technicians on request. Cost-effective concepts for modernisation of your systems and pumps can also be developed. **sera** provides you with maintenance contracts on request as regular maintenance by the specialists increases the operational reliability.
Contact us.

Customer Training
Training courses by **sera** are held by us at our premises and also at your site on request. Our training courses are both customer as well as application oriented. Thus you always receive the best training matched to your individual requirements so that you have the optimum basis for handling our products.

Further information on **sera** Service on the Internet

© 2015 **sera GmbH**
Subject to technical modifications.

i

Customer data

Company:.....	**Name:** .....
.....	**Phone:** .....
.....	**Fax:** .....
.....	**E-mail:** .....

Medium

Medium[1)]	
Concentration (%)	Vapour pressure at operating temperature (bar)
Viscosity (mPas)	Solids content - size
Operating temperature max. (°C)	Operating temperature min. (°C)
Dosing accuracy (%)	Density (g/cm³)

Operating data

Nominal capacity max. (l/h)[1)]	Nominal capacity min. (l/h)
Pressure at the pump pressure joint (bar)[1)]	Pressure at suction joint (bar)[1)]
Pressure line width (DN)	Total length of pressure line (m)
Suction line width (DN)	Total length of suction line (m)
Max. suction height (m WS)	Type of stroke adjustment
Material at pressure line	Material suction line

Motor data

Voltage (V)	Voltage type
Frequency (Hz)	Protection class (IP)

[1)] This is the minimum information required for an offer!

Remarks

.....

.....

.....

..... Place and date

..... Stamp and signature

© 2015 **sera GmbH**
Subject to technical modifications.

Fax: 0 56 73 / 999-03
E-mail: info-prodos@sera-web.com

Please use the following symbols

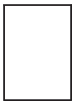
1 Suction tank

2 Shut-off valve

3 Line strainer

4 Dosing pump

5 Relief valve

6 Pressure-keeping valve

7 Pulsation damper

8 Manometer

9 Ball check valve

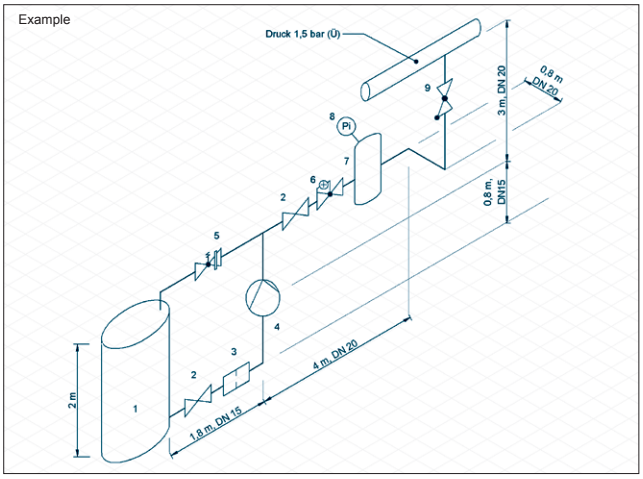

R+I-diagram (sketch)

© 2015 **sera GmbH**
Subject to technical modifications.

i

☐ Inquiry ☐ Order No.: ..... Date:.....

Customer data

Company:.....	Name: .....
.....	Phone: .....
.....	Fax: .....
.....	E-mail: .....
Project/Commission:	

Medium

Medium with Attributes: .....
(Concentration, temperature, viscosity...)
.....

Inquiry-/Orderinformation

Article (Basic design) Type	Options / Accessories		Article-No.	Piece/s
	Description	Specification		
R 409.2-18e				1
	Valve balls	PTFE		1
	integrated relief valve	PP		1
	Hose nozzle compl.	PP, d12	90003877	2
620.10			37600014	1
Pulsation damper				

Remarks

.....

.....

.....

....
Place and date Stamp and signature

© 2015 sera GmbH
Subject to technical modifications.

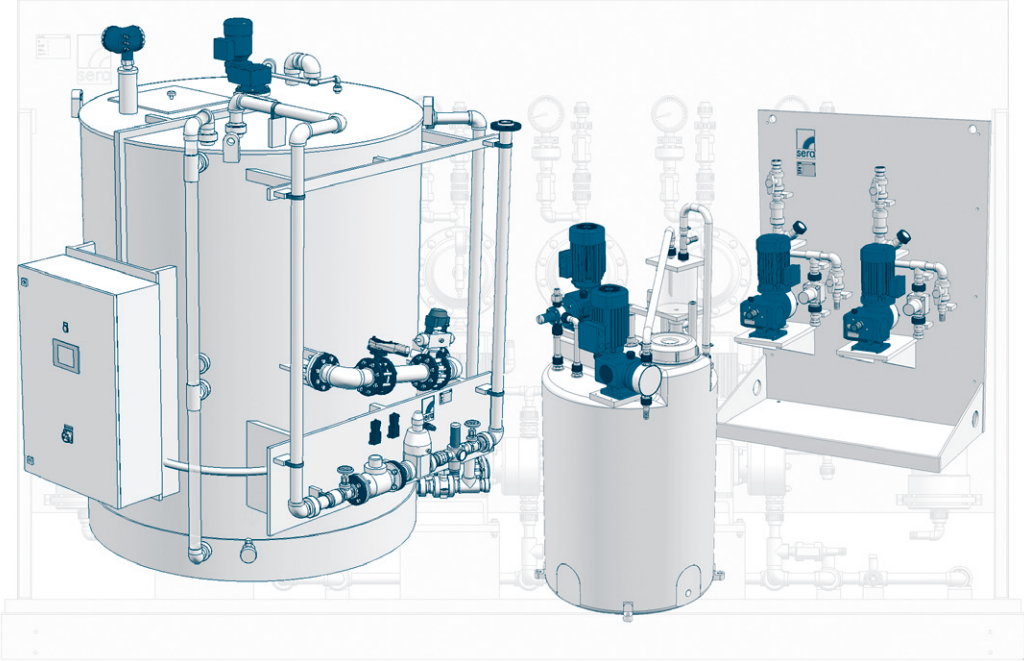

Dosing units and -systems for...

Environmental technology
Domestic Technique
Sewage Treatment Plants
Waterworks
Power Plants
Beverage-/ Food Industry
Chemical Industry
Paper Industry
Sugar Industry
Textile Industry
Petrochemistry
Agriculture
Mechanical Engineering

as well as other sectors dealing with the storage, feeding and dosing of liquid chemicals.

Dosing units and -systems		Product range	Page
Preparation units	PolyLine® for polymer solutions	PolyLine® Flow PolyLine® Swing PolyLine® Double	1.2
	for suspensions (e.g. lime milk, calcium sulphate, activated carbon a.o.)		see industrial solutions
	for chemical solutions	HY-DA AN-DA	1.8
Dosing-, transfusing- and storage units for liquid chemicals	Vertical construction (f. wall mounting)	CVD	1.12
	Horizontal construction (f. ground erection)		see industrial solutions
Dosing systems	for desinfection	ClO_2 - units PDS	1.16
	for coloration and mixing	KKV-Dosing system	1.20
	for mobile usage	DG - Series	1.22
Compact dosing units	For the storage and dosing of different chemical solutions	CTD	1.24
Industrial solutions	Examples of different dosing units in industrial specific designs		1.27
Accessories for dosing units	tanks, agitators, measuring instruments, dry feeders		1.43

© 2015 **sera GmbH**
Subject to technical modifications.

PolyLine® Flow

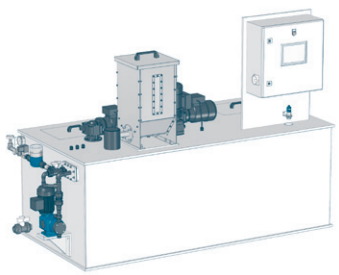

PolyLine® Flow in survey

- Fully automatic preparation of organic flocculent aid (pulverized and/or liquid)
- Process logic control (PLC)
- Selectable concentration of prepared solution
- Feeding device
- Dry material feeder with thermal protection zone
- Pump for liquid polymer (option)
- Dissolving water unit
- Electric agitators
- Performance graduation that meets the requirements

Infobox

Order informationen Page 1.3
Options/Accessories Page 1.3

Resistance Chart Chapter 5
Installation examples Chapter 5

1

Technical data

Type	Max. preparation capacity at 45 min. maturing time		Power consumption	max. weight (kg, empty)		
	l/h	gal/h	approx. kW	‚S‘	‚L‘	‚SL‘
PolyLine® Flow 500	500	132	2,0	250	230	270
PolyLine® Flow 1000	1000	264	2,0	270	240	290
PolyLine® Flow 2000	2000	528	2,0	300	280	340
PolyLine® Flow 4000	4000	1057	2,0	380	360	410
PolyLine® Flow 8000	8000	2113	2,0	470	450	520

Dimensional drawing

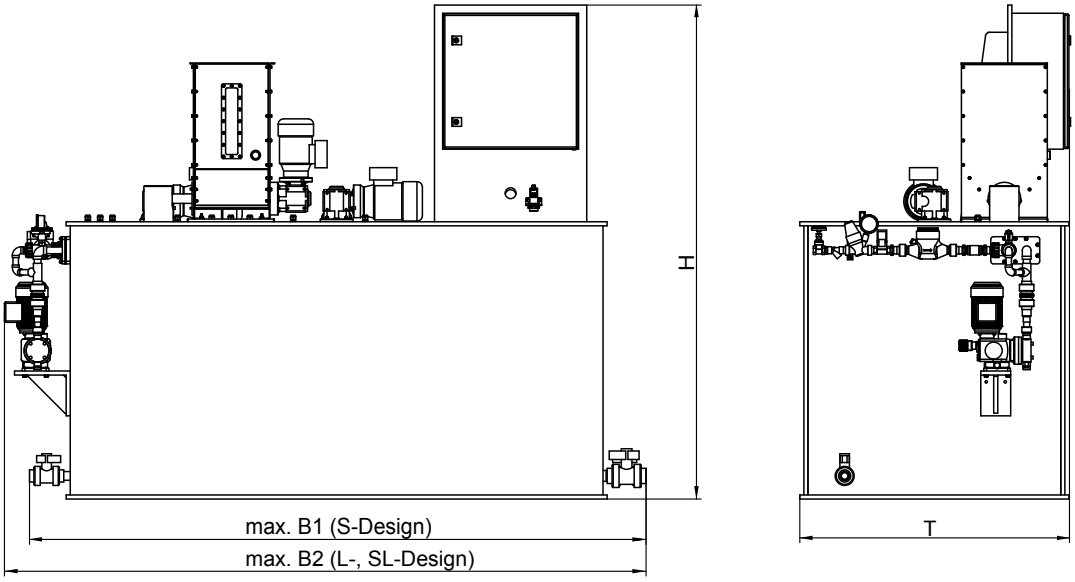

Dimensional chart

Indications in mm / inch

Type	B1		B2		T		H*		Connections	
	mm	in	mm	in	mm	in	mm	in	Removal	Supply
PolyLine® Flow 500	2240	88,19	2340	92,13	990	38,98	1550	61,02	DN25	DN15
PolyLine® Flow 1000	2240	88,19	2340	92,13	990	38,98	1550	61,02	DN25	DN15
PolyLine® Flow 2000	2270	89,37	2360	92,91	990	38,98	1820	71,65	DN32	DN15
PolyLine® Flow 4000	3310	130,31	3390	133,46	1280	50,39	2110	83,07	DN40	DN25
PolyLine® Flow 8000	4330	170,47	4470	175,98	1570	61,81	2330	91,73	DN50	DN25

* depending on the height of the dry material feeder (DMF)

Electrical data (standard-design)

Type	Supply voltage	Control voltage	Enclosure	
			Control cabinet	Electrical consumers
PolyLine® Flow ...	3 / 400 V / Hz + N + PE	24 V DC	IP 54	IP 55

© 2015 sera GmbH
Subject to technical modifications.

Irder information

Basic design

PolyLine® Flow

- 3-Chamber tank made of PP
- Dry material feeder (DMF) with hopper, 25 liters
- Feeding device
- 2x electric agitator (low speed)
- 1x Level monitoring
- Dissolving water unit
- PLC for fully automatic preparation
- Language on display de/en

Type	Design		x
Flow 500	S		
Flow 500	L		
Flow 500	SL		
Flow 1000	S		
Flow 1000	L		
Flow 1000	SL		
Flow 2000	S		
Flow 2000	L		
Flow 2000	SL		
Flow 4000	S		
Flow 4000	L		
Flow 4000	SL		
Flow 8000	S		
Flow 8000	L		
Flow 8000	SL		

- S = Solid Polymer
- L = Liquid Polymer
- SL = Solid / Liquid Polymer

Options/Accessories				x
Hopper Extension (for DMF)	(Expansion of volume: 25 liters)		▲	
Electric external vibrator (for DMF)			▲	
Low-level indicator for hopper (for DMF)			▲	
After-dilution station	Dilution of the preparation in a ratio of 1:10	2...6 m³ / h	▲	
		5...12 m³ / h	▲	
		8...20 ³ / h	▲	
3rd electric agitator		Chamber volume 500 l - 2000 l	▲	
		Chamber volume 4000 l - 8000 l	▲	
Overflow protection			▲	
Hopper loader			▲	
Special voltage	for control and other electrical consumers		✆	
BUS-connection	PROFIBUS DP / Slave		✆	
	Incl. Ethernet		✆	
Control panel	Control panel TOUCH	Display with Touchscreen - de / en	●	
	Language	other languages possible	✆	

● = Basis design – = not available ▲ = with add. price ✆ = on request ❍ = without add. price Art.-No. = als available in basic design/accessories

© 2015 **sera GmbH**
Subject to technical modifications.

PolyLine® Swing

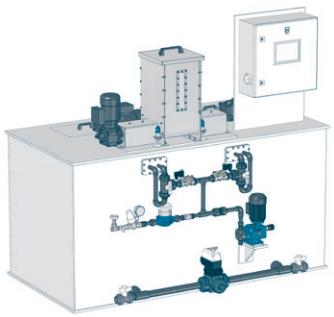

PolyLine® Swing in survey

- Fully automatic preparation of organic flocculent aid (pulverized and/or liquid)
- Process logic control (PLC)
- Selectable concentration of prepared solution
- Feeding device
- Dry material feeder with thermal protection zone
- Pump for liquid polymer (option)
- Dissolving water unit
- Electric agitators
- Performance graduation that meets the requirements

Infobox

Order informationen Page 1.5
Options/Accessories Page 1.5

Resistance Chart Chapter 5
Installation examples Chapter 5

1

Technical data

Type	Max. preparation capacity at 45 min. maturing time		Power consumption	max. weight (kg, empty)		
	l/h	gal/h	approx. kW	‚S‘	‚L‘	‚SL‘
PolyLine® Swing 500	2x500	2x132	2,0	240	230	260
PolyLine® Swing 1000	2x1000	2x264	2,0	240	230	260
PolyLine® Swing 2000	2x2000	2x528	2,0	280	260	295
PolyLine® Swing 4000	2x4000	2x1057	2,0	460	440	480

Dimensional drawing

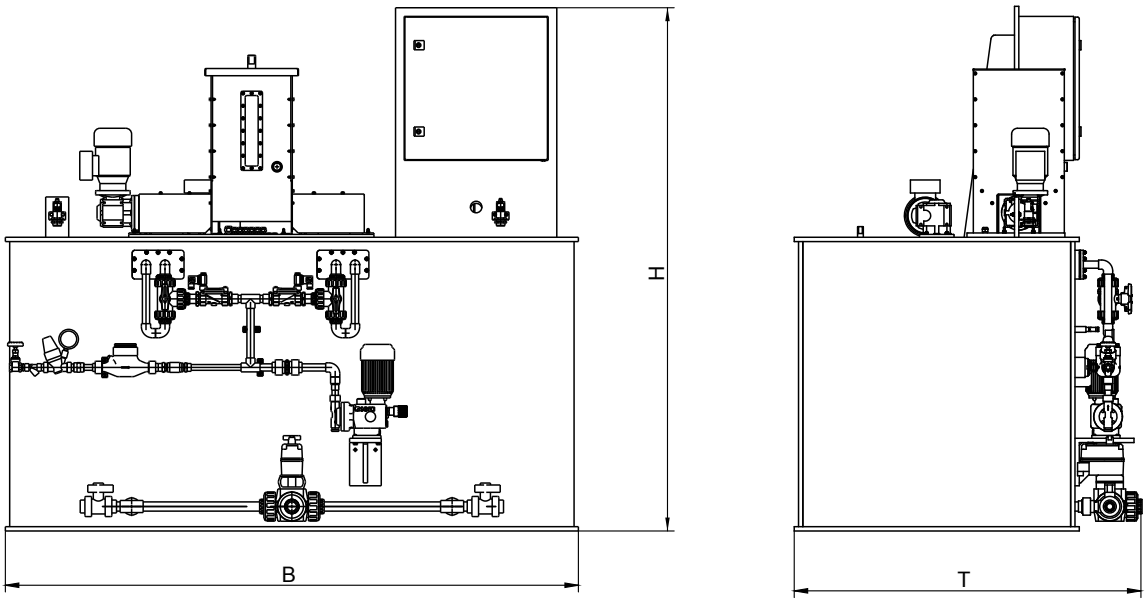

Dimensional chart

Indications in mm / inch

Type	max. B		T		H*		Connections	
	mm	in	mm	in	mm	in	Removal	Supply
PolyLine® Swing 1000	1990	78,35	1210	47,64	1550	61,02	DN25	DN15
PolyLine® Swing 2000	1990	78,35	1220	48,03	1820	71,65	DN32	DN15
PolyLine® Swing 4000	2990	117,72	1520	59,84	2110	83,07	DN40	DN25
PolyLine® Swing 8000	4000	157,48	1820	71,65	2330	91,73	DN50	DN25

* depending on the height of the dry material feeder (DMF)

Electrical data (standard-design)

Type	Supply voltage	Control voltage	Enclosure	
			Control cabinet	Electrical consumers
PolyLine® Swing...	3 / 400 V / Hz + N + PE	24 V DC	IP 54	IP 55

© 2015 sera GmbH
Subject to technical modifications.

Order information

Basic design

PolyLine® Swing

- 2-Chamber tank made of PP
- Dry material feeder (DMF) with hopper, 25 liters
- Feeding device
- 2x electric agitator (low speed)
- 2x level monitoring
- Dissolving water unit
- PLC for fully automatic preparation
- Language on display de/en

Type	Design		x
Swing 500	S		
Swing 500	L		
Swing 500	SL		
Swing 1000	S		
Swing 1000	L		
Swing 1000	SL		
Swing 2000	S		
Swing 2000	L		
Swing 2000	SL		
Swing 4000	S		
Swing 4000	L		
Swing 4000	SL		

- S = Solid Polymer
- L = Liquid Polymer
- SL = Solid / Liquid Polymer

Options/Accessories				x
Hopper Extension (for DMF)	(Expansion of volume: 25 liters)		▲	
Electric external vibrator (for DMF)			▲	
Low-level indicator for hopper (for DMF)			▲	
Nachverdünnstation	Verdünnung des Ansatzes im Verhältnis 1:10	2...6 m³ / h	▲	
		5...12 m³ / h	▲	
		8...20 ³ / h	▲	
Overflow protection			▲	
Overflow		Chamber volume 500 l - 2000 l	▲	
		Chamber volume 4000 l	✆	
Hopper loader			▲	
Special voltage	for control and other electrical consumers		✆	
BUS-connection	PROFIBUS DP / Slave		✆	
	Incl. Ethernet		✆	
Control panel	Control panel TOUCH	Display with Touchscreen - de / en	●	
	Language	other languages possible	✆	

● = Basis design — = not available ▲ = with add. price ✆ = on request ❍ = without add. price Art.-No. = available in basic design/ accessories

© 2015 **sera GmbH**
Subject to technical modifications.

PolyLine® Double

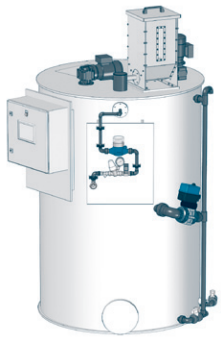

PolyLine® Double in survey

- Fully automatic preparation of organic flocculent aid (pulverized and/or liquid)
- Process logic control (PLC)
- Selectable concentration of prepared solution
- Feeding device
- Dry material feeder with thermal protection zone
- Pump for liquid polymer (option)
- Dissolving water unit
- Electric agitator
- Performance graduation that meets the requirements

Infobox

Order informationen Page 1.7
Options/Accessories Page 1.7

Resistance Chart Chapter 5
Installation examples Chapter 5

1

Technical data

Type	Max. preparation capacity at 45 min. maturing time		Power consumption	max. weight (kg, empty)		
	l/h	gal/h	approx. kW	‚S‘	‚L‘	‚SL‘
PolyLine® Double 500	500	132	2,0	200	160	210
PolyLine® Double 1000	1000	264	2,0	240	200	250
PolyLine® Double 2000	2000	528	2,0	325	285	335

Dimensional drawing

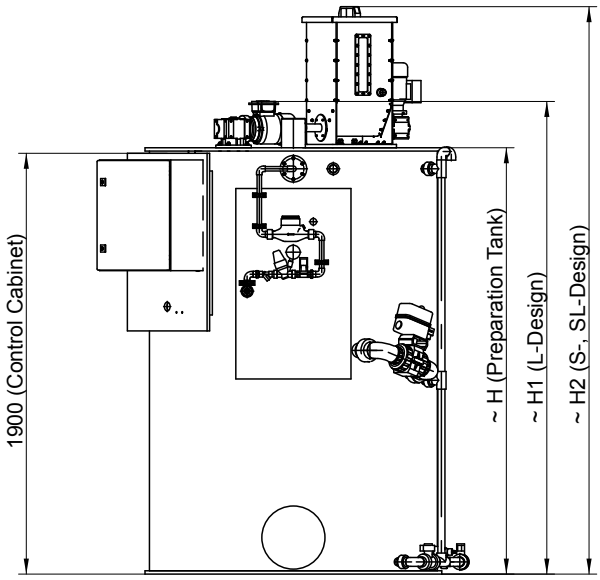

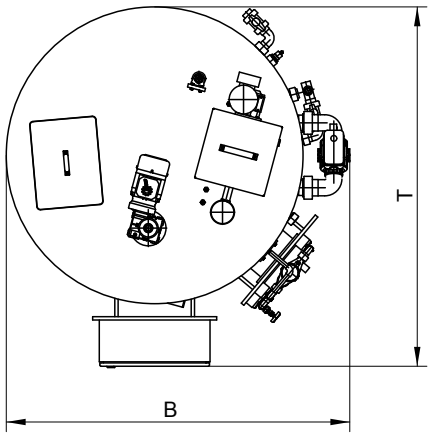

Dimensional chart
Indications in mm / inch

Type	max. B		max. T		max. H		max. H1		max. H2*		Connections	
	mm	in	mm	in	mm	in	mm	in	mm	in	Removal	Supply
PolyLine® Double 500	1320	51,97	1420	55,91	1370	53,94	1570	61,81	2000	78,74	DN25	DN15
PolyLine® Double 1000	1560	61,42	1630	64,17	1925	75,79	2140	84,25	2570	101,18	DN25	DN15
PolyLine® Double 2000	2020	79,53	2180	85,83	1900	74,80	2130	83,86	2540	100,00	DN32	DN15

* depending on the height of the dry material feeder (DMF)

Electrical data (standard-design)

Type	Supply voltage	Control voltage	Enclosure	
			Control cabinet	Electrical consumers
PolyLine® Double...	3 / 400 V / Hz + N + PE	24 V DC	IP 54	IP 55

© 2015 sera GmbH
Subject to technical modifications.

Order information

Basic design

PolyLine® Double

- 2-Chamber tank made of PP
- Dry material feeder (DMF) with hopper, 25 liters
- Feeding device
- 1x electric agitator (low speed)
- 1x level monitoring
- Dissolving water unit
- PLC for fully automatic preparation
- Language on display de/en

Type	Design		x
Double 500	S		
Double 500	L		
Double 500	SL		
Double 1000	S		
Double 1000	L		
Double 1000	SL		
Double 2000	S		
Double 2000	L		
Double 2000	SL		

- S = Solid Polymer
- L = Liquid Polymer
- SL = Solid / Liquid Polymer

1

Options/Accessories				x
Hopper Extension (for DMF)	(Expansion of volume: 25 liters)		▲	
Electric external vibrator (for DMF)			▲	
Low-level indicator for hopper (for DMF)			▲	
Nachverdünnstation	Verdünnung des Ansatzes im Verhältnis 1:10	2...6 m³ / h	▲	
		5...12 m³ / h	▲	
		8...20 ³ / h	▲	
Overflow protection			▲	
Overflow			▲	
Conveyor unit			▲	
Special voltage	for control and other electrical consumers		✆	
BUS-connection	PROFIBUS DP / Slave		✆	
	Incl. Ethernet		✆	
Control panel	Control panel TOUCH	Display with Touchscreen	●	
	Language	other languages possible	✆	

● = Basis design – = not available ▲ = with add. price ✆ = on request ❍ = without add. price Art.-No. = available in basic design/ accessories

© 2015 **sera GmbH**
Subject to technical modifications.

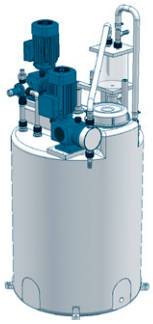

HY-DA in survey

- Complete dosing system
- Compact design
- User-friendly
- No deleterious emissions
- High dosing accuracy
- Low maintenance
- High lifetime
- Simple integration in existing water/steam cycles

Infobox

Order information Page 1.9
Options/Accessories Page 1.9
Resistance chart Chapter 5
Installation examples Chapter 5

Technical data

Type	Tank volume		Conveying capacity		max. permissible counter pressure		Weight (empty)
	Litre	Gallons	l/h	gal/h	bar	psi	approx. kg
HY - DA 200 - 4,0	200	53	3,75	0,97	10	145	49
HY - DA 200 - 7,0	200	53	7,5	1,94	10	145	49
HY - DA 200 - 18	200	53	18	4,64	10	145	54
HY - DA 200 - 25	200	53	25	6,45	10	145	54
HY - DA 200 - 50	200	53	50	12,90	10	145	54
HY - DA 200 - 75	200	53	75	19,35	10	145	55

Dimensional drawing

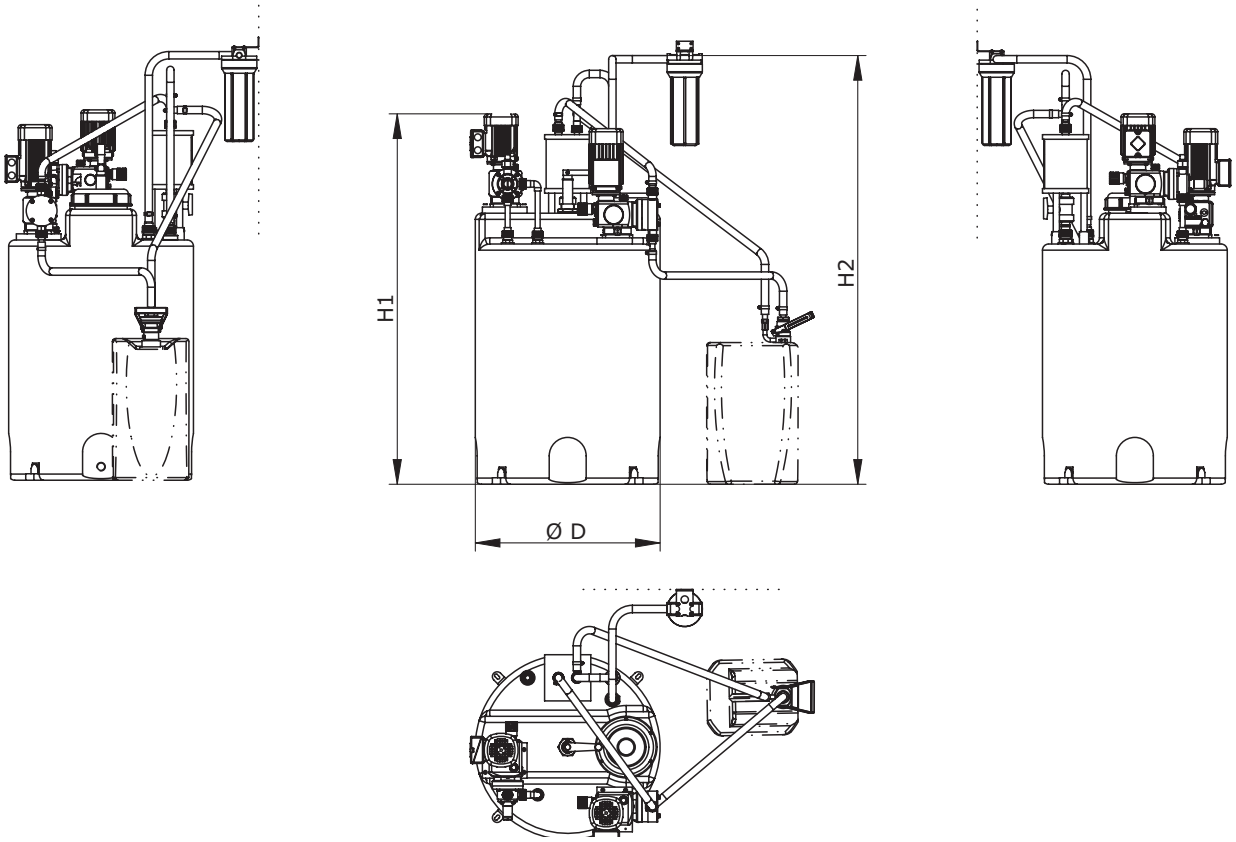

Dimensional chart
Indications in mm /inch

Typ	D		H1		approx. H2		Process connections	
	mm	in	mm	in	mm	in	Thinning water	Pressure line
HY - DA 200 - 4,0	600	23,62	1250	49,21	1400	55,12	Insert PVC, d=20	G 3/4
HY - DA 200 - 7,0	600	23,62	1250	49,21	1400	55,12	Insert PVC, d=20	G 3/4
HY - DA 200 - 18	600	23,62	1250	49,21	1400	55,12	Insert PVC, d=20	G 3/4
HY - DA 200 - 25	600	23,62	1250	49,21	1400	55,12	Insert PVC, d=20	G 3/4
HY - DA 200 - 50	600	23,62	1250	49,21	1400	55,12	Insert PVC, d=20	G 3/4
HY - DA 200 - 75	600	23,62	1250	49,21	1400	55,12	Insert PVC, d=20	G 3/4

© 2015 sera GmbH
Subject to technical modifications.

Order information

Basic design

Preparation- and dosing unit HY-DA

- Dosing tank made of PE-transparent, content 200 litres / DxH: 650x880mm seals EPDM or FPM
- Transfusing pump Type R 409.2-115e
- Tapping coupling with flushing adapter made of 1.4571 (without fig.)
- Manual agitator made of PVC (gas tight) Type HM 200.1 G
- Proportioning vessel made of PVC-transp. Type 8195 (content: 2 litres)
- Dosing pump with integrated relief valve
- Suction lance made of PVC (gas tight)
- Dosing valve Type 691.1 (made of 1.4571)
- Activated carbon filter
- Dosing hoses made of PVC with cross-textile ply
- Connection parts (pressure side) for Dosing pump and -valve

Options/Accessories			x
HY-DA 500 - ...	Dosing tank made of PE-transparent, content 500 litres, DxH: 790x1180 Proportioning vessel Type 8197, content 10 litres	▲	
Enlargement of the unit for combination Hydrazine / ammonia preparation	additional 3-way-ball cock, suction lance and hose	▲	
Absorption vessel with integrated wall mounting	Content 20 litres Material: PE/EPDM	▲	
Electric agitator	Type SM4 incl. sealing flange	▲	
mounted ON/OFF-switch for transfusing pump		▲	
Collecting basin		▲	

Preparation- and dosing units with piston-diaphragm pumps up to 50 bar or piston pumps upt to 140 bar on request

● = Basis design – = not available ▲ = with add. price ✆ = on request ❍ = without add. price Art.-No. = available in basic design/ accessories

© 2015 **sera GmbH**
Subject to technical modifications.

AN-DA ...

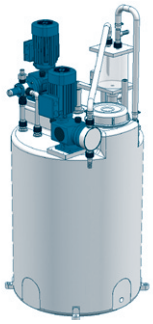

AN-DA in survey

- Complete dosing system
- Compact design
- User-friendly
- No deleterious emissions
- High dosing accuracy
- Low maintenance
- High lifetime
- Simple integration in existing systems

Infobox

Order information Page 1.11
Options/Accessories Page 1.11

Resistance chart Chapter 5
Installation examples Chapter 5

1

Technical Data

Type	Tank capacity		Conveying capacity		max. permissible counterpressure		Weight (empty)
	litres	psi	litres/hour	psi	bar	psi	approx. kg
AN - DA 200 - 4,0	200	53	3,75	0,97	10	145	49
AN - DA 200 - 7,0	200	53	7,5	1,94	10	145	49
AN - DA 200 - 18	200	53	18	4,64	10	145	54
AN - DA 200 - 25	200	53	25	6,45	10	145	54
AN - DA 200 - 50	200	53	50	12,90	10	145	54
AN - DA 200 - 75	200	53	75	19,35	10	145	55

Dimensional drawing

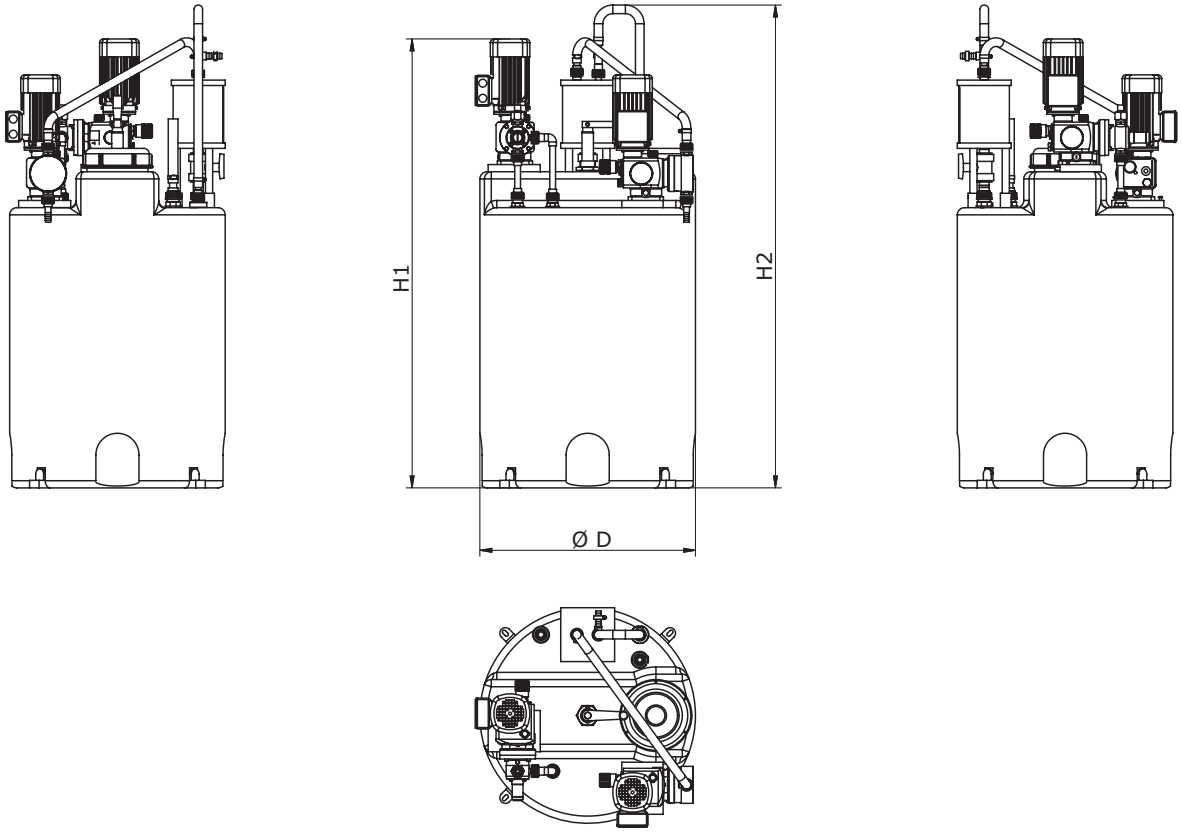

Dimensional chart
Indications in mm / inch

Type	D		H1		approx. H2		Process connections	
	mm	in	mm	in	mm	in	Dilution water	Pressure line
AN - DA 200 - 4,0	600	23,62	1250	49,21	1400	55,12	Insert PVC, d=20	G 3/4
AN - DA 200 - 7,0	600	23,62	1250	49,21	1400	55,12	Insert PVC, d=20	G 3/4
AN - DA 200 - 18	600	23,62	1250	49,21	1400	55,12	Insert PVC, d=20	G 3/4
AN - DA 200 - 25	600	23,62	1250	49,21	1400	55,12	Insert PVC, d=20	G 3/4
AN - DA 200 - 50	600	23,62	1250	49,21	1400	55,12	Insert PVC, d=20	G 3/4
AN - DA 200 - 75	600	23,62	1250	49,21	1400	55,12	Insert PVC, d=20	G 3/4

© 2015 **sera GmbH**
Subject to technical modifications.

Order information

Basic design

Preparation- and dosing unit AN-DA

- Dosing tank made of PE-transparent, content 200 litres / DxH: 650x880mm seals EPDM or FPM
- Transfusing pump Type R 409.2-115e
- Manual agitator made of PVC (gas tight) Type HM 200.1 G
- Proportioning vessel made of PVC-transp. Type 8195 (content: 2 litres)
- Dosing pump with integrated relief valve
- Suction lance made of PVC (gas tight)
- Dosing hoses made of PVC with cross-textile ply

Options/Accessories			x
AN-DA 300 - ...	Dosing tank made of PE-Transparent, content 300 litres, DxH: 670x1300 Proportioning vessel Type 8196, content 5 litres	▲	
AN-DA 500 - ...	Dosing tank made of PE-Transparent, content 500 litres, DxH: 790x1180 Proportioning vessel Type 8197, content 10 litres	▲	
mounted ON/OFF-switch for transfusing pump		▲	
Collecting basin		▲	

Preparation- and dosing units with piston-diaphragm pumps up to 50 bar or piston pumps up to 140 bar on request

● = Basis design – = not available ▲ = with add. price ✆ = on request ❍ = without add. price Art.-No. = available in basic design/ accessories

© 2015 **sera GmbH**
Subject to technical modifications.

CVD1(s)- ...

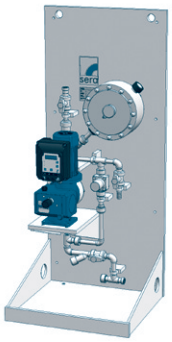

CVD1(s) in survey

- The most modern pump technology
- Standardized mounting plates
- Space-saving wall mounting
- Wide range of applications
- High safety standard
- Large range of capacity
- High dosing accuracy
- Easy to operate
- Low maintenance
- Complete range of accessories

Infobox

Order informations Page 1.13
Options Page 1.13

Resistance chart Chapter 5
Installation examples Chapter 5

1

Technical data

Type	Conveying capacity		permissible counterpressure		permissible suction height	Quantity pumps	Pump series
	l/h	gal/h	bar	psi	mWC		
CVD1(s)-60.1	up to 60	up to ~16	up to 10	up to 145	up to 3	1	R/C 204.1-0,4e ... R/C 204.1-35e R/RF/C 409.2-0,4e ... R/RF/C 409.2-50e R/RF/C 410.2-11ML ... R/RF/C 410.2-45ML
CVD1(s)-550.1	up to 550	up to ~145	up to 8	up to 116	up to 3	1	R/RF/C 409.2-75e ... R/RF/C 409.2-350e R/RF/C 410.2-200e ... R/RF/C 410.2-570e R/RF/C 409.2-72ML ... R/RF/C 410.2-500ML
CVD1(s)-1500.1	up to 1500	up to ~396	up to 5	up to 72,5	up to 3	1	R/RF/C 410.2-570e ... R/RF/C 410.2-1450e R/RF/C 410.2-940ML ... R/RF/C 410.2-1200ML

Dimensional drawing for application example

Application example
Basic design with following options:

- Diaphragm pulsation damper
- Suction side with ball cock and line strainer
- Feedback pipe from relief valve back to suction side

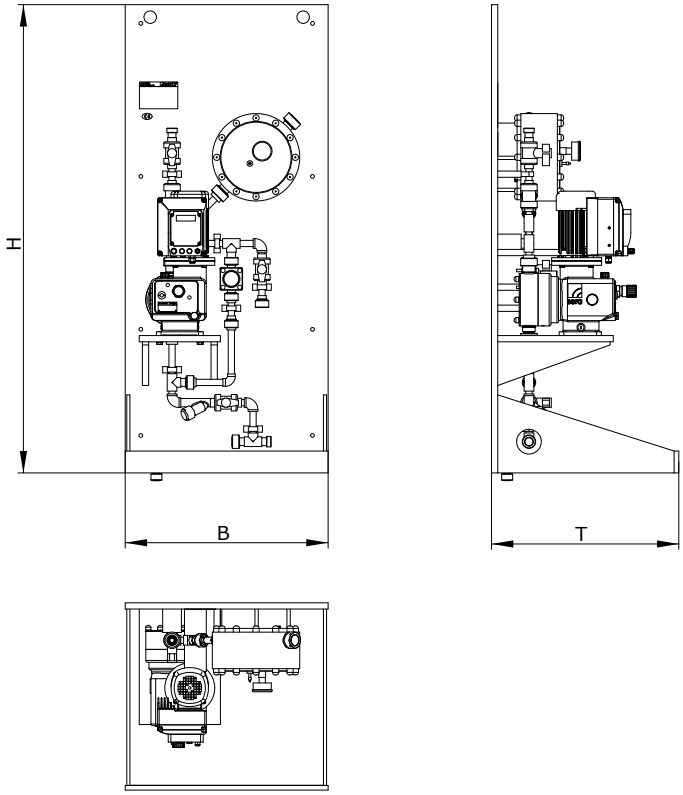

Dimensional chart
Indications in mm / inch

Type	B		T		H	
	mm	in	mm	in	mm	in
CVD1-60.1	650	25,59	600	23,62	1500	59,06
CVD1-550.1	650	25,59	600	23,62	1500	59,06
CVD1-1500.1	650	25,59	600	23,62	1500	59,06
CVD1(s)-60.1	650	25,59	600	23,62	1000	39,37
CVD1(s)-550.1	650	25,59	600	23,62	1000	39,37
CVD1(s)-1500.1	650	25,59	600	23,62	1000	39,37

© 2015 sera GmbH
Subject to technical modifications.

Order information

Basic design

CVD1(s)

- Diaphragm pump
- 2-way-ball cock on pressure side (shut-off + draining)
- Diaphragm relief valve
- Mounting plates made of PP (with drip pan)
- Pipework pressure side, made of PVC-U or PP
- Seals made of EPDM or FPM
- Connection suction side: suction valve of pump
- Connection pressure side: male thread of shut-off fitting

Options						x
Diaphragm pulsation damper	720.1 (up to 25 l/h (6,60 gal/h))		▲	–	–	
	721.2 (up to 50 l/h (13,21 gal/h))		▲	–	–	
	722.1 (up to 220 l/h (56,76 gal/h))		–	▲	–	
	723.1		–	▲	–	
	713.1		–	–	▲	
Suction side with ball-cock and line strainer			▲	▲	▲	
Feedback pipe from relief valve back to suction side (only in combination with suction side pipework)			▲	▲	▲	
Terminal box (R/RF-pump)			▲	▲	▲	
Terminal box	R204.1		▲	–	–	
	C-pump	up to 0,37 kW	▲	▲	–	
		0,75 kW and above		▲	▲	
Terminal box (with power outlet)	R204.1		▲	–	–	
	C-pump	up to 0,37 kW	▲	▲	–	
		0,75 kW and above		▲	▲	
Power outlet (each pump)	socket outlet with earthing contact (C-pumps, R204.1)		▲	▲	–	
	CEE-power outlet (C-pumps w. compact drive)		▲	▲	▲	
ON- / OFF-switch (not in association with terminal box or wall socket)	for R/RF409.2/410.2		▲	▲	▲	
Protective roof for driving motor			▲	▲	▲	
Splash guard			▲	▲	▲	
Leakage sensor (without WHG-approval)			▲	▲	▲	
Leakage sensor (with WHG-approval)			▲	▲	▲	
Framework	galvanized steel		▲	▲	▲	
	plastic		▲	▲	▲	
Multifunction device (Priming aid/Calibration pot)			▲	▲	–	
further accessories on request						

● = Basis design – = not available ▲ = with add. price ✆ = on request ❍ = without add. price Art.-No. = available in basic design/ accessories

© 2015 **sera GmbH**
Subject to technical modifications.

CVD 2 - ...

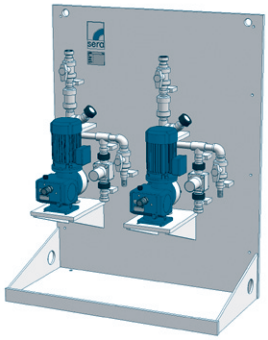

CVD 2 in survey

- The most modern pump technology
- Standardized mounting plates
- Space-saving wall mounting
- Wide application range
- High safety standard
- Large range of capacity
- High dosing accuracy
- Easy to operate
- Low maintenance
- Complete accessory programme

Infobox

Order informations Page 1.15
Options/Accessories Page 1.15

Resistance chart Chapter 5
Installation examples Chapter 5

1

Technical data

Type	Conveying capacity		permissible counterpressure		permissible suction height	Quantity pumps	Pump-series
	(up to) l/h	(up to) gal/h	(up to) bar	(up to) psi	mWC		
CVD 2 - 60.1	2 x 50	2 x ~13	10	145	up to 3	2	R/C 204.1-0,4e ... R/RF/C 409.2-50
CVD 2 - 550.1	2 x 570	2 x ~152	10	116	up to 5	2	R/RF/C 409.2-75 ... R/RF/C 410.2-570
CVD 2 - 1500.1	2 x 1450	2 x ~386	5	72,5	up to 3	2	R/RF/C 410.2-700 ... R/RF/C 410.2-1450

Dimensional drawing for application example

Application example
(basic design)

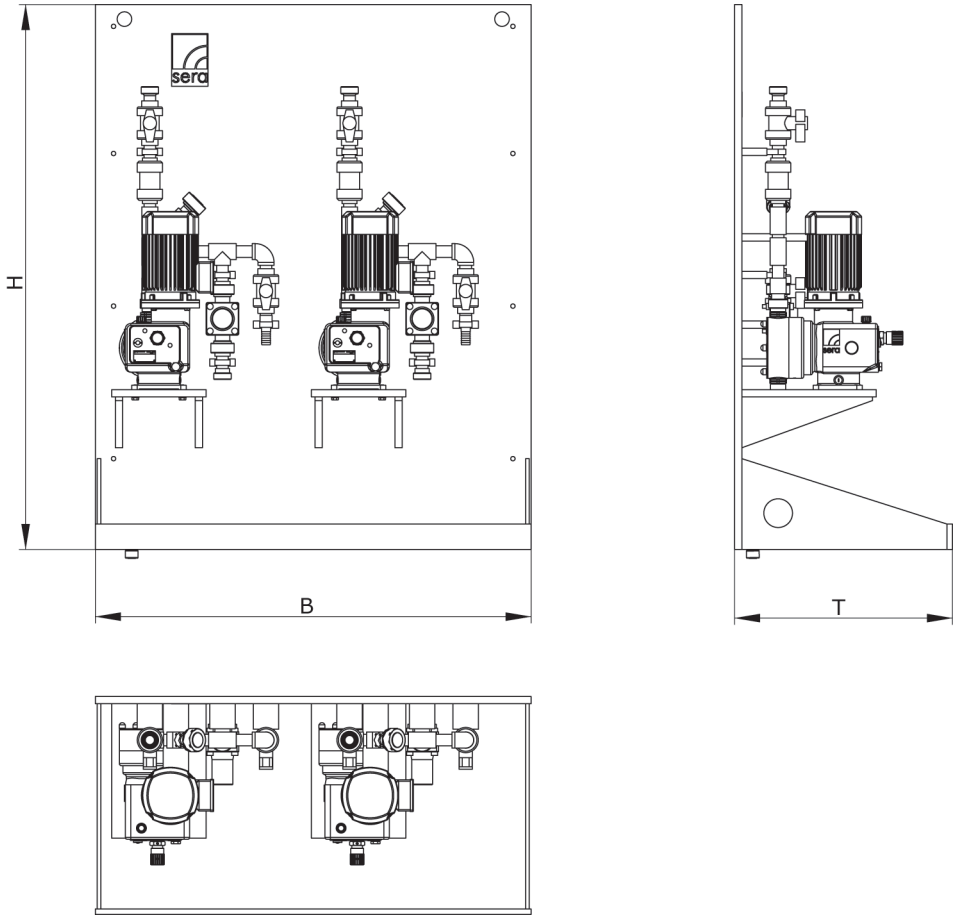

Dimensional chart
Indications in mm / inch

Type	B		T		H	
	mm	in	mm	in	mm	in
CVD 2 - 60.1	1200	47,24	600	23,62	1500	59,06
CVD 2 - 550.1	1200	47,24	600	23,62	1500	59,06
CVD 2 - 1500.1	1200	47,24	600	23,62	1500	59,06

© 2015 sera GmbH
Subject to technical modifications.

Order information

Basic design

CVD 2

- 2 diaphragm pumps
- 2-way-ball cock on pressure side (shut-off + draining)
- Diaphragm relief valve
- Mounting plates made of PP (with drip pan)
- Pipework pressure side, made of PVC-U or PP
- Seals made of EPDM or FPM
- Connection suction side: suction valve of pump
- Connection pressure side: male thread of shut-off fitting

Options/Accessories					x
Diaphragm pulsation damper	720.1 (up to 25 l/h (6,45 gal/h))	▲	–	–	
	721.2 (up to 50 l/h (12,90 gal/h))	▲	–	–	
	722.1 (up to 180 l/h (46,45 gal/h))	–	▲	–	
	723.1	–	▲	–	
Please note: Use 2 dampers in case of 2 separate pressure sides.	713.1	–	–	▲	
Suction side with ball-cock and line strainer (1 at a time each pump)		▲	▲	▲	
Suction side connecting piping (pump 1 and pump 2)		▲	▲	▲	
Pipework from relief valve back to suction side (only in combination with suction side pipework; 1 at a time each pump)		▲	▲	▲	
Pressure side connecting piping (pump 1 and pump 2)		▲	▲	▲	
Terminal box	R 204.1	▲	–	–	
	R/RF 409.2 / R/RF 410.2	▲	▲	▲	
	C-pump, up to 0,37 kW	▲	▲	–	
	C-pump, 0,75 kW and above		▲	▲	
Terminal box (with power outlet)	R 204.1	▲	–	–	
	C-pump, up to 0,37 kW	▲	▲	–	
	C-pump, 0,75 kW and above	–	▲	▲	
Power outlet (each pump)	socket outlet with earthing contact (C-pumps, R 204.1)	▲	▲	–	
	CEE-power outlet (C-pumps w. compact drive)	▲	▲	▲	
ON- / OFF-switch (not in association with terminal box or wall socket)	for R/RF 409.2/410.2	▲	▲	▲	
Protective roof for driving motor		▲	▲	▲	
Splash guard		▲	▲	▲	
Leakage sensor (without WHG-approval)		▲	▲	▲	
Framework	galvanized steel	▲	▲	▲	
	plastic	▲	▲	▲	
Drain cock (drip pan)		▲	▲	▲	
Multifunction device (Priming aid/Calibration pot)		▲	▲	–	
further accessories on request					

● = Basis design – = not available ▲ = with add. price ✆ = on request ❍ = without add. price Art.-No. = available in basic design/ accessories

© 2015 **sera GmbH**
Subject to technical modifications.

CDG - ...

CDG in survey

- Fully automatic production of 2-percent ClO_2 with help of modern control and pump technology
- Highest accuracy
- Excellent efficiency factor
- High reliability
- Easy to operate
- Space saving construction for wall fastening
- Qualified for industrial use
- Practice-oriented capacity grading
- Complete accessories program

Infobox

Order information Page 1.17
Options/Accessories Page 1.17

Resistance chart Chapter 5
Installation examples Chapter 5

1

Technical Data

Type	Power 50/60 Hz gramm/hour	Chemical consumption litre/hour HCl	Chemical consumption litre/hour $NaClO_2$	Power consumption approx. kW	Weight (empty) approx. kg
CDG - 125.1	125	3,2	3,2	0,2	64
CDG - 220.1	220	5,5	5,5	0,2	64
CDG - 500.1	500	12,6	12,6	1,5	70
CDG - 1000.1	1000	25,2	25,2	1,5	75

Dimensional drawing

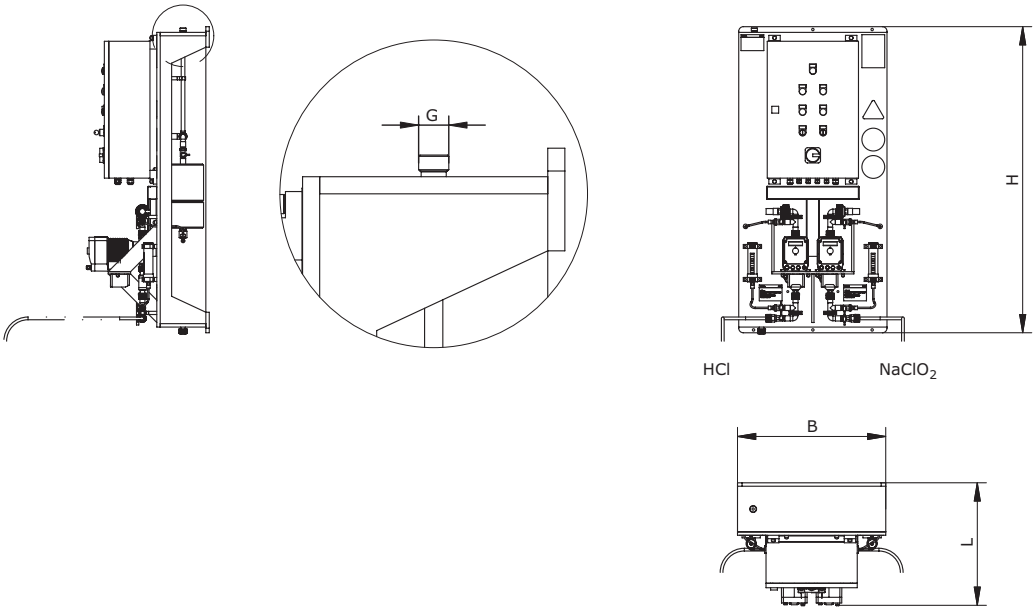

Dimensional chart
Indications in mm / inch

Type	Process connection G	L mm	L in	B mm	B in	H mm	H in
CDG - 125.1	G 3/4	530*	20,87	650	25,59	1350	53,15
CDG - 220.1	G 3/4	530*	20,87	650	25,59	1350	53,15
CDG - 500.1	G 3/4	590*	23,15	650	25,59	1350	53,15
CDG - 1000.1	G 3/4	590*	23,15	650	25,59	1350	53,15

Electrical data / Control technology

Input	3 digital inputs 1 analogue input (adjustable)	Fault external controller, external ON, external stream bypass (4...20mA) controller or water meter
Output	3 potential free outputs 1 output 230 V	Pre-alarm tank, release controller, collective fault Voltage supply (e.g. for ClO_2-measuring)
Enclosure	Control cabinet Solenoid-diaphragm pump (CDG - 125.1 u. - 220.1) Diaphragm pump (CDG - 500.1 u. - 1000.1)	IP 65 IP 65 IP 55
Supply voltage	230 V / N / PE, 50 Hz	

© 2015 sera GmbH
Subject to technical modifications.

Order information

Basic design

Chlorine dioxide-production unit

- 2 Dosing pumps of C-series
- 2 Flow meter
- 2 Calibration pot
- 2 Pressure switch
- 1 Reactor
- Fittings, hoses, brackets
- 2 suction lance with pre-alarm + run dry protection
- 2 Adapter for suction lance for for drum
- Control device (impulse/analog input)
- Wall mounting frame (PP)

Options/Accessories			x
Thinning water unit		▲	
Chemical gas absorber	for HCl	▲	
	for $NaClO_2$	▲	
Contact water meter (main current)		▲	
ClO_2 - Measuring and control unit		▲	
ClO_2 - photometer (for fast determination of ClO_2 - concentration)		▲	
Drum for HCl (without filling)	30 Litres (~7,5 Gallons)	▲	
	60 Litres (~15 Gallons)	▲	
Drum for HCl (incl. filling, 9-percent solution)	30 Litres (~ 7,5 Gallons)	▲	
	60 Litres (~15 Gallons)	▲	
Drum for $NaClO_2$ (without filling)	30 Litres (~7,5 Gallons)	▲	
	60 Litres (~15 Gallons)	▲	
Drum for $NaClO_2$ (incl. filling, 7,5-percent solution)	30 Litres (~7,5 Gallons)	▲	
	60 Liter (~15 Gallons)	▲	
Collecting basin for drum	Content appr.. 30 Litres (~7,5 Gallons)	▲	
	Content appr.. 60 Litres (~15 Gallons)	▲	
BUS-connection	Profibus DP / Slave	▲	
	Ind. Ethernet	▲	

more accessories on request

● = Basis design – = not available ▲ = with add. price ✆ = on request ❍ = without add. price Art.-No. = available in basic design/ accessories

© 2015 **sera GmbH**
Subject to technical modifications.

PDS - ...

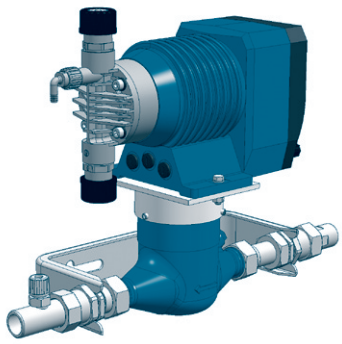

Proportional dosing system in survey

- Dosing system ready to operate
- The most modern pump technology
- Space-saving compact design
- Infinitely variable capacity
- Quantity based dosing
- Highest accuracy
- Easy to operate
- Low maintenance
- Complete accessories program

Infobox

Order information Page 1.19
Options/Accessories Page 1.19

Resistance chart Chapter 5
Installation examples Chapter 5

1

Technical data

Type	Nominal capacity			Permissible counterpressure		Permissible suction height	Power consumption	Input suply voltage 1~, 50/60 Hz	Weight
	l/h	gal/h	ml/Stroke	bar	psi	mWS	(ca.) kW	Volt	approx. kg
PDS - 1,2	0 - 1,2	0 - 0,32	0 - 0,13	10	145	3	0,05	230	6,0
PDS - 2,4	0 - 2,4	0 - 0,63	0 - 0,27	10	145	3	0,05	230	7,0
PDS - 6,0	0 - 6,0	0 - 1,59	0 - 0,67	6	87	3	0,05	230	7,0
PDS - 7,0	0 - 7,0	0 - 1,85	0 - 0,78	10	145	3	0,05	230	7,5
PDS - 10	0 - 10	0 - 2,64	0 - 1,11	6	87	3	0,05	230	8,0

Pulse sequence 0,5 Litre/pulse (more pulse sequences on request)

Dimensional drawing

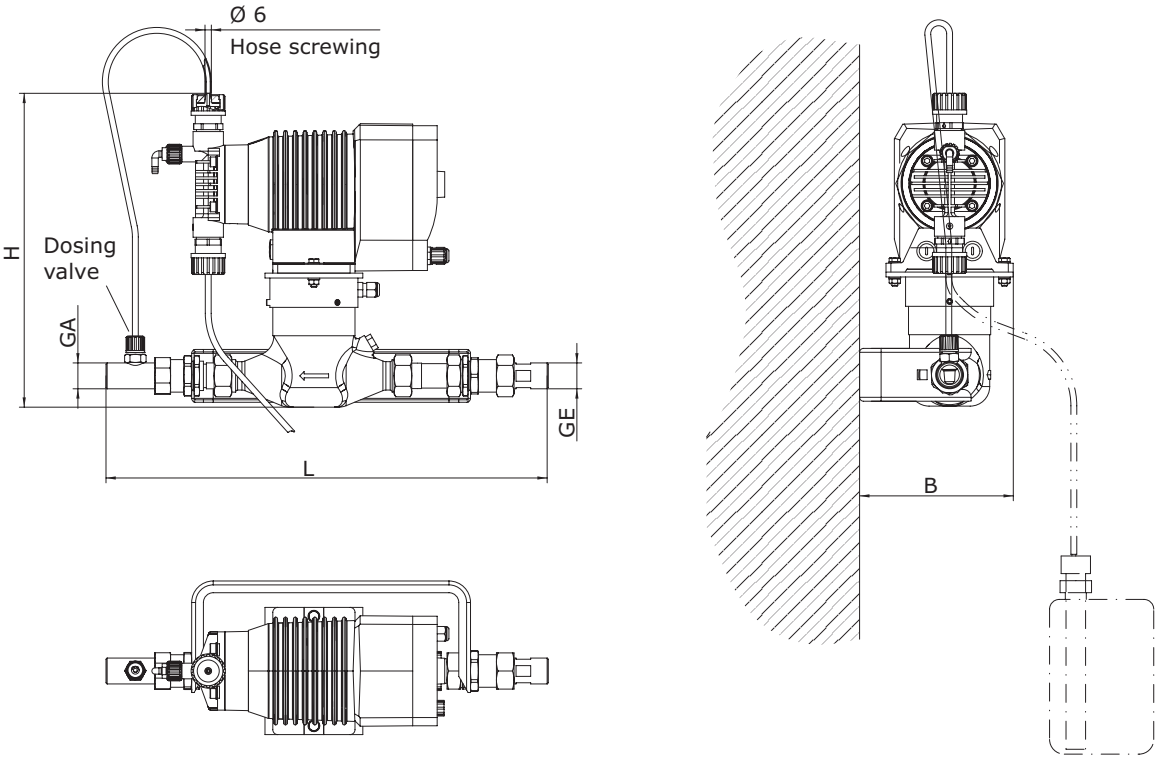

Dimensional chart
Indications in mm / inch

Type	L		B		H		Process connection	
	mm	in	mm	in	mm	in	GE (Inlet)	GA (Outlet)
PDS - 1,2	450	17,72	157	6,18	320	12,60	R1	R1
PDS - 2,4	450	17,72	157	6,18	320	12,60	R1	R1
PDS - 6,0	450	17,72	157	6,18	320	12,60	R1	R1
PDS - 7,0	450	17,72	157	6,18	320	12,60	R1	R1
PDS - 10	450	17,72	157	6,18	320	12,60	R1	R1

© 2015 sera GmbH
Subject to technical modifications.

Order information

Basic design

Proportional dosing system PDS

- Solenoid diaphragm pump
- Contact water meter DA 20
- Dosing valve
- Calibration pot
- Suction lance
- Wall fixing device
- 2m dosing hose, PE, 4/6

Options/Accessories			x
Contact water meter	DA 25	▲	
	DA 40	▲	
Suction lance with one level switch	Type SL-11.1 length 600 mm (23,62 in) Plug M12	▲	
Suction lance with two level switch	Type SL-12.1 length 600 mm (23,62 in) Plug M12	▲	
Dosing hose, PE, 4/6	5m	▲	
	10m	▲	
further accessories on request			

● = Basis design – = not available ▲ = with add. price ✆ = on request ❍ = without add. price Art.-No. = available in basic design/ accessories

© 2015 **sera GmbH**
Subject to technical modifications.

KKV - ...

KKV-Dosing system in survey

- Fully automatic operation
- Highest accuracy
- The most modern control- and pump technology
- High operational safety
- Easy to operate
- High lifetime
- Low maintenance
- Complete accessory programme

Infobox

Order information Page 1.21
Options/Accessories Page 1.21

Resistance chart Chapter 5
Installation examples Chapter 5

1

Technical data

Type	total capacity 50/60 Hz		Chemical consumption				Power consumption	Weight
			Color		Lye			
	l/min	gal/min	l/h	gal/h	l/h	gal/h	kW	kg
KKV-20,8.1	20,8	5,49	1000	264	250	66	approx. 1,0	approx. 170

Dimensional drawing

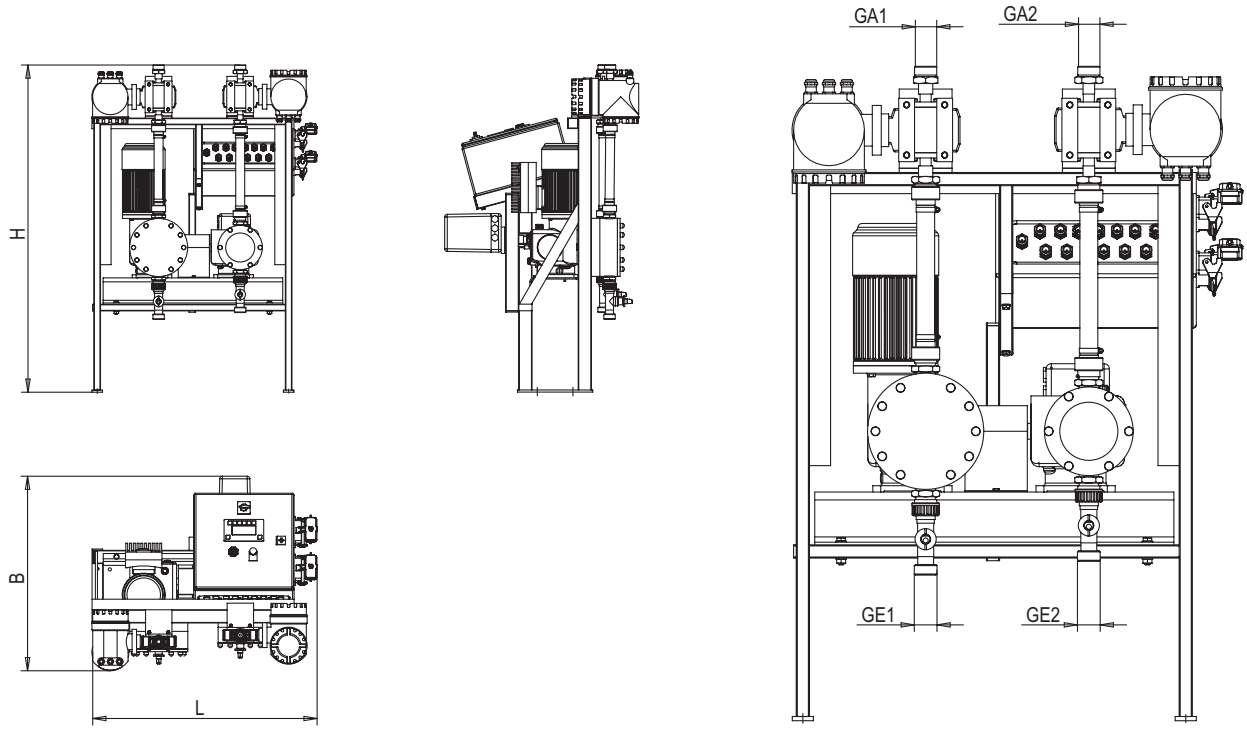

Dimensional chart

Dimensions in mm / inch

Type	L		B		H		Dosage color		Dosage lye	
	mm	in	mm	in	mm	in	GE1	GA1	GE2	GA2
KKV - 20,8.1	860	33,9	740	29,1	1240	48,8	G1 1/4	G1 1/4	G1 1/4	G1 1/4

Electrical data / control technology

Input	4 digital inputs (potential bonded):	release pump, release control, fast stop, pump flushing
	1 analogue input	0/4-20 mA from external fill level controller or external fill level measurement (analog signal must be potential-free)
Output	4 potential free outputs	flush valve, drain valve, color ready, collective fault
Supply voltage	3 x 400 V / 50 Hz / N /PE	
Enclosure	IP54	
Control voltage 1	230 V / 50 Hz	
Control voltage 2	24 V DC	

© 2015 sera GmbH
Subject to technical modifications.

Order information

Basic design

KKV-Dosing system

- Dosing pump
  Type RF410.2-1100e / RK410.2-450e
- Driving motor with integrated frequency converter
- Mounted actuator (lye-dosage)
- Stroke frequency transmitter
- 2 magneto-inductive flow controllers
- 2 kapacitive sensors for fluid monitoring
- Mounted control (PLC-technology) with operator panel
- System-wiring and -piping incl. mounting-frame

Options/Accessories			
Diaphragm pressure-keeping valve	Type 624.D	▲	
Connection parts for diaphragm pressure-keeping valve		▲	
Suction basket	Type 722	▲	
Suction basket	Type 724	▲	
T-piece made of PVC, DN25		▲	
PVC-hose with cross-textile ply	16/24	▲	
	32/42	▲	
Hose clamp	16/27	▲	
	32/50	▲	

further accessories on request

● = Basis design – = not available ▲ = with add. price ✆ = on request ❍ = without add. price Art.-No. = available in basic design/ accessories

© 2015 **sera GmbH**
Subject to technical modifications.

DG -...

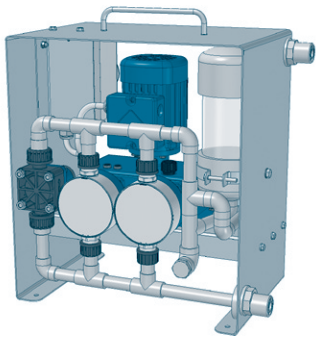

Dosing device in survey

- Mobile, ready-to-use dosing system
- Rack made of stainless steel
- Integrated overpressure protection
- Electrical protection over motor protection switch
- Pulsation poor
- Infinitely adjustable delivery rate
- Highest accuracy
- Nearly pressure independent performance curves
- Easy to operate
- Low maintenance
- Complete accessories program

Infobox

Order information Page 1.23
Options/Accessories Page 1.23

Resistance chart Chapter 5
Installation examples Chapter 5

1

Technical data

Type	Nominal capacity		Permissible counterpressure		Permissible suction height	Power consumption	Weight
	l/h	gal/h	bar	psi	mWC	(approx.) kW	kg
DG - 200	0 - 200	0 - 53	4	58	3	0,18	23
DG - 400	0 - 400	0 - 106	4	58	3	0,18	29
DG - 600	0 - 600	0 - 159	4	58	3	0,18	35

Dimensional drawing

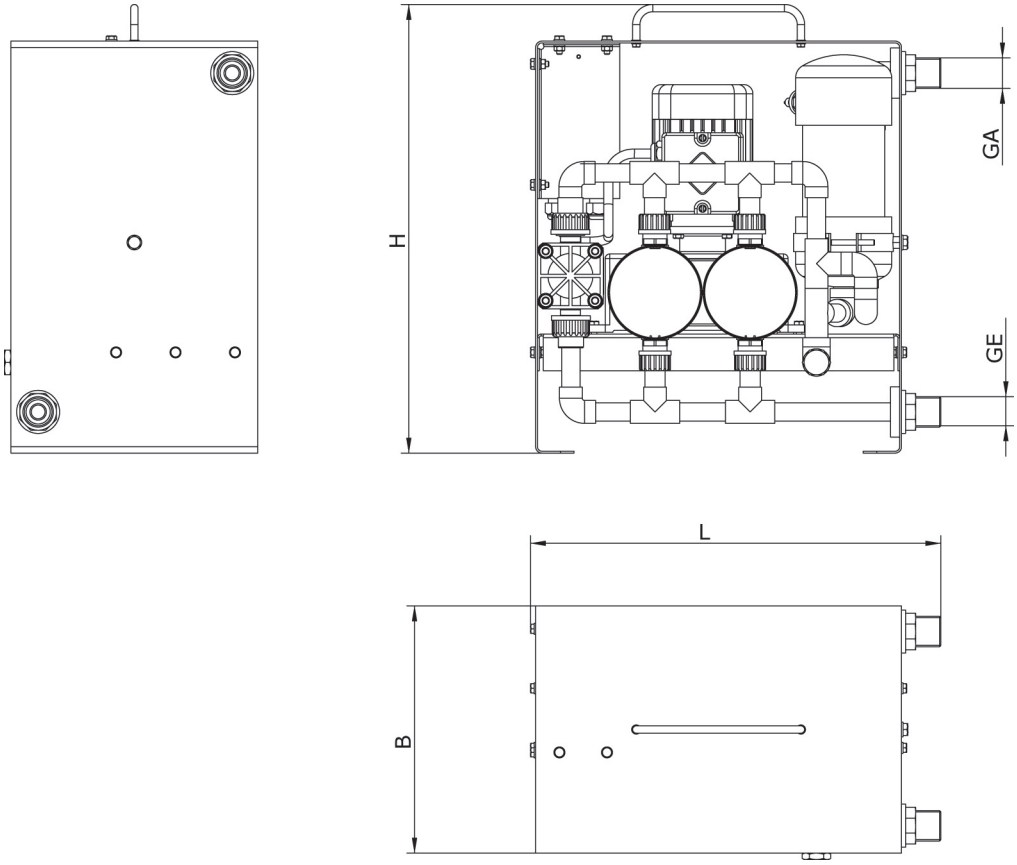

Dimensional chart

Dimenisons in mm / inch

Type	L		B		H		Process connection	
	mm	in	mm	in	mm	in	GE (Inlet)	GA (Outlet)
DG - 200	450	17,72	450	17,72	490	19,29	G1	G1
DG - 400	450	17,72	450	17,72	490	19,29	G1	G1
DG - 600	450	17,72	450	17,72	490	19,29	G1	G1

© 2015 sera GmbH
Subject to technical modifications.

Order information

Basic design

Dosing device DG

- Dosing pump with three-phase motor
  DG - 200 : R 409.1-190e
  DG - 400 : ZR 409.1-190e
  DG - 600 : DR 409.1-190e
- Flow display
- Motor protection switch
- Diaphragm-type relief valve
- Pulsation damper
- Bracket
- Rack made of stainless stee
- Connection pipe (deliverd loose)
- Spray nozzle
- 5m dosing hose (EPDM)

Options/Accessories			x
AC motor		▲	
Dosing hose	EPDM, 13/20	▲	
	EPDM, 19/27	▲	
Check valve		▲	
Automatic switch-off in case of bulk shortage		▲	
Alarm-automatic switch-off in case of fluid shortage		▲	
further accessories on request			

● = Basis design – = not available ▲ = with add. price ✆ = on request ❍ = without add. price Art.-No. = available in basic design/ accessories

© 2015 **sera GmbH**
Subject to technical modifications.

CTD - ...

CTD in survey

- Standardized dosing tanks
- Space-saving design
- Wide application range
- High safety standard
- High-quality materials
- Easy to operate
- Low maintenance
- Complete accessory program

Infobox

Order information Page 1.25
Options/Accessories Page 1.25

Resistance chart Chapter 5
Installation examples Chapter 5

1

Technical data

Type	Tank volume		conveying capacity		max. permissible counterpressure		Suction lance DN	Dosing pump series (option)
	Litres	Gallons	l/h	gal/h	bar	psi		
CTD - 40.1	40	10,57	0,4 ... 35	0,1 ... 9,25	bis 10	bis 145	5	R/C 204.1-0,4e ... R/C 204.1-35e
CTD - 75.1	75	19,81	0,4 ... 180	0,1 ... 47,55	bis 10	bis 145	5/10	R/C 204.1-0,4e ... R/RF/C 409.2-180e
CTD - 100.1	100	26,42	0,4 ... 180	0,1 ... 47,55	bis 10	bis 145	5/10	R/C 204.1-0,4e ... R/RF/C 409.2-180e
CTD - 200.1	200	52,83	0,4 ... 570	0,1 ... 150,58	bis 10	bis 145	5/10/15	R/C 204.1-0,4e ... R/RF/C 410.2-570e
CTD - 300.1	300	79,25	0,4 ... 570	0,1 ... 150,58	bis 10	bis 145	5/10/15	R/C 204.1-0,4e ... R/RF/C 410.2-570e
CTD - 500.1	500	132	0,4 ... 570	0,1 ... 150,58	bis 10	bis 145	5/10/15	R/C 204.1-0,4e ... R/RF/C 410.2-570e
CTD - 1000.1	1000	264	0,4 ... 570	0,1 ... 150,58	bis 10	bis 145	5/10/15	R/C 204.1-0,4e ... R/RF/C 410.2-570e

Dimensional drawing

CTD - BASIC

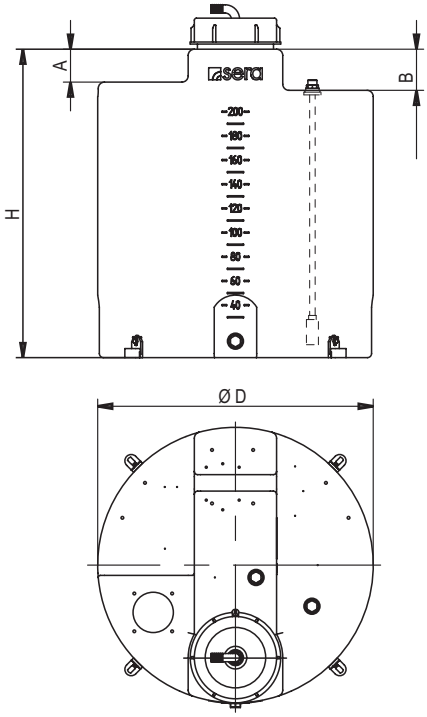

CTD - OPTIONS

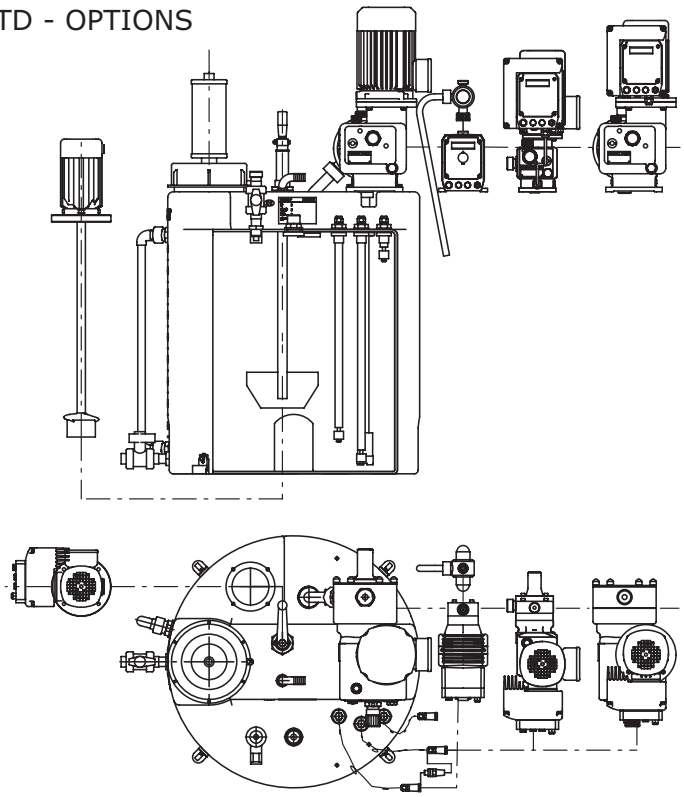

Dimensional chart
Dimensions in mm / inch

Type	D		A		B		H*	
	mm	in	mm	in	mm	in	mm	in
CTD - 40.1	420	16,54	70	2,76	70	2,76	425	16,73
CTD - 75.1	460	18,11	70	2,76	70	2,76	600	23,62
CTD - 100.1	460	18,11	70	2,76	70	2,76	760	29,92
CTD - 200.1	670	26,38	80	3,15	100	3,94	750	29,53
CTD - 300.1	670	26,38	80	3,15	100	3,94	1030	40,55
CTD - 500.1	790	31,10	90	3,54	90	3,54	1170	46,06
CTD - 1000.1	1080	42,52	110	4,33	110	4,33	1290	50,79

- * Depending on the application of the respective pump-series extended the measure H. Refer to the product pages of the pump series.

© 2015 sera GmbH
Subject to technical modifications.

Order information

Basic design

Packaged units CTD

- Dosing tank (PE-transparent) with litre scale and screw cap DN162
- Suction lance with foot valve and sieve
- Ventilation- / exhaust bow with hose nozzle
- Brackets for floor mounting

Options/Accessories			CTD-40.1	x	CTD-75.1 CTD-100.1	x	CTD-200.1 CTD-300.1	x	CTD-500.1	x	CTD-1000.1	x
Dosing tank	PE-transparent		●		●		●		●		●	
	PE-black		▲		▲		▲		▲		▲	
	Brackets for floor mounting		●		●		●		●		●	
Key lock	for screw cap		▲		▲		▲		▲		▲	
Collecting basin	CBR - xxx.1		▲		▲		▲		▲		▲	
	floor fastening		▲		▲		▲		▲		▲	
	Splash guard		–		▲		▲		–		–	
Gas-tight design	Completely gas-tight system		▲		▲		▲		▲		▲	
	Chemical vapor lock	binder BM1	▲		▲		▲		▲		▲	
		binder BM2	▲		▲		▲		▲		▲	
Dissolving basket	(not gas-tight)		–		▲		▲		▲		▲	
Dosing pump	R/C 204.1		▲		▲		▲		▲		▲	
	R/C 409.2		–		▲		▲		▲		▲	
	R/C 410.2		–		–		▲		▲		▲	
Agitators (see page 1.48 - 1.51)	Manual stamping mixer		▲		▲		–		–		–	
	Manual agitator		–		–		▲		▲		–	
	Electric agitator		–		▲[1)]		▲		▲		▲	
Level switch (soleonid float)	LSL	(min.)	▲		▲		▲		▲		▲	
	LSLL	(min.- min.)	▲		▲		▲		▲		▲	
	LSH	(max.)	▲		▲		▲		▲		▲	
Multi fuction valve	f. dosing pumps up to 50 l/h		▲		▲		▲		▲		▲	
Filling joint	DN15	G1	▲		▲		▲		▲		▲	
	DN25	G1 1/2	▲		▲		▲		▲		▲	
Tank gland	DN15	G1	▲		▲		▲		▲		▲	
Level indicator	only for tank-design PE-black		▲		▲		▲		▲		▲	
Feedback line (e.g.relief valve of dosing pump)			▲		▲		▲		▲		▲	
Drain fitting	DN15		▲		▲		▲		▲		▲	
Hose for connection to ventilation system (incl. hose clamp)	PVC	d20	▲		▲		▲		▲		▲	
		d30	–		–		–		▲		▲	
Control			▲		▲		▲		▲		▲	
Cabling			▲		▲		▲		▲		▲	
Dosing equipment (DE) (Pressure-keeping-valve, pulsation damper, shut-off-valve)	for tank mounting		–		✆		✆		✆		✆	
	for wall mounting		✆		✆		✆		✆		✆	

further accessories on request

[1)] container volume from 100 liters.

● = Basis design – = not available ▲ = with add. price ✆ = on request ❍ = without add. price Art.-No. = available in basic design/ accessories

© 2015 **sera GmbH**
Subject to technical modifications.

© 2015 **sera GmbH**
Subject to technical modifications.

Industrial solutions

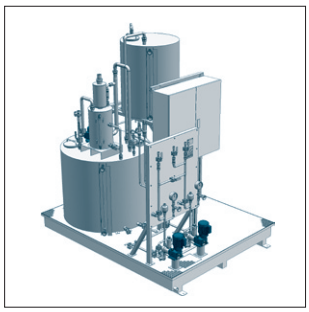

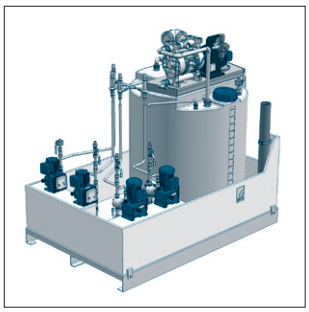

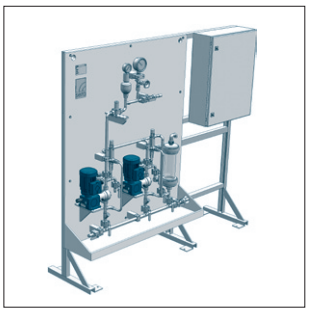

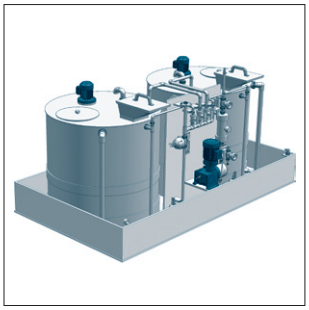

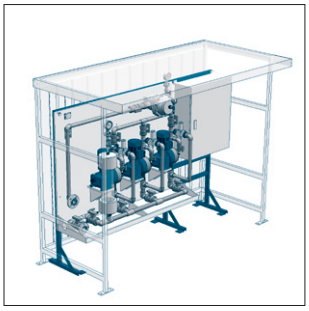

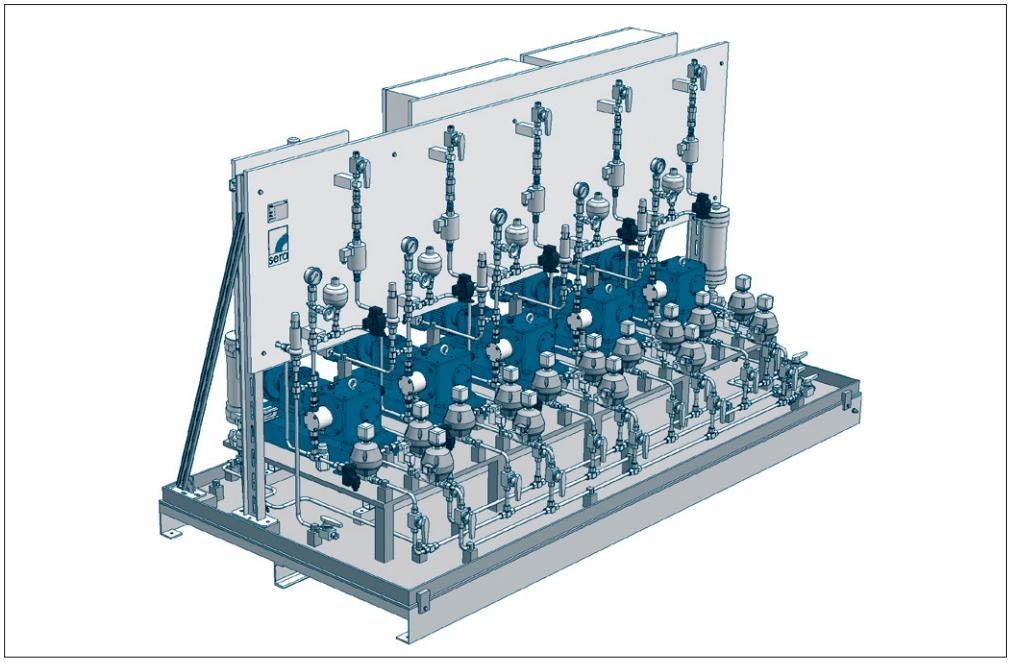

sera - dosing units and -systems are used in following industry sectors:

- Severage Technology
- Brewery- / Beverage Industry
- Chemical Industry
- Printing Industry
- Iron- and Steel Industry
- Electrical- and Semiconductor Industry
- Energy Technology
- Domestic Technology
- Power plants
- Agriculture
- Food Industry
- Mechanical Engineering
- Dairies
- Surface Technology
- Paper Industry
- Petrochemistry
- Pharmaceutical Industry
- Swimming baths
- Textile Industry
- Environmental Technology
- Water conditioning

If you do not find your industry sector in this list, do not hesitate to contact us. We can also offer you an optimal solution for your application from our wide product range.

© 2015 **sera GmbH**
Subject to technical modifications.

1

The following products are usually used in sera - dosing units and dosing systems:

- Storage- and dosing tanks
- Collecting basins
- Dosing pumps
- Feeding pumps
- Dry feeder
- Agitators
- Fittings
- Complete controls incl. measuring technics

Only high-quality, media-resistant materials are used:

- PVC-U
- PP
- PE
- PVDF
- PTFE
- Stainless steel (e.g. 1.4571)
- Hastelloy
- Rubber-lined C-steel

Advantages of sera - dosing units and dosing systems:

- High reliability and availability
- Low operating amd maintenance costs
- Easyto operate
- Complete systems all from **sera**
- Full after-sales-service
- Custom-designed solutions
- Chemical-resistant material designs

© 2015 **sera GmbH**
Subject to technical modifications.

Preparation units (e.g. for boiler feed water - chemicals)

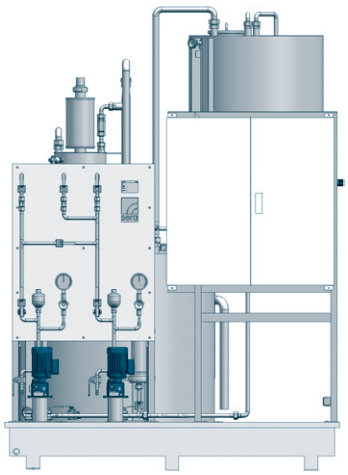

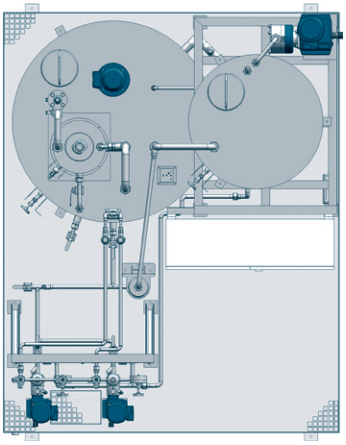

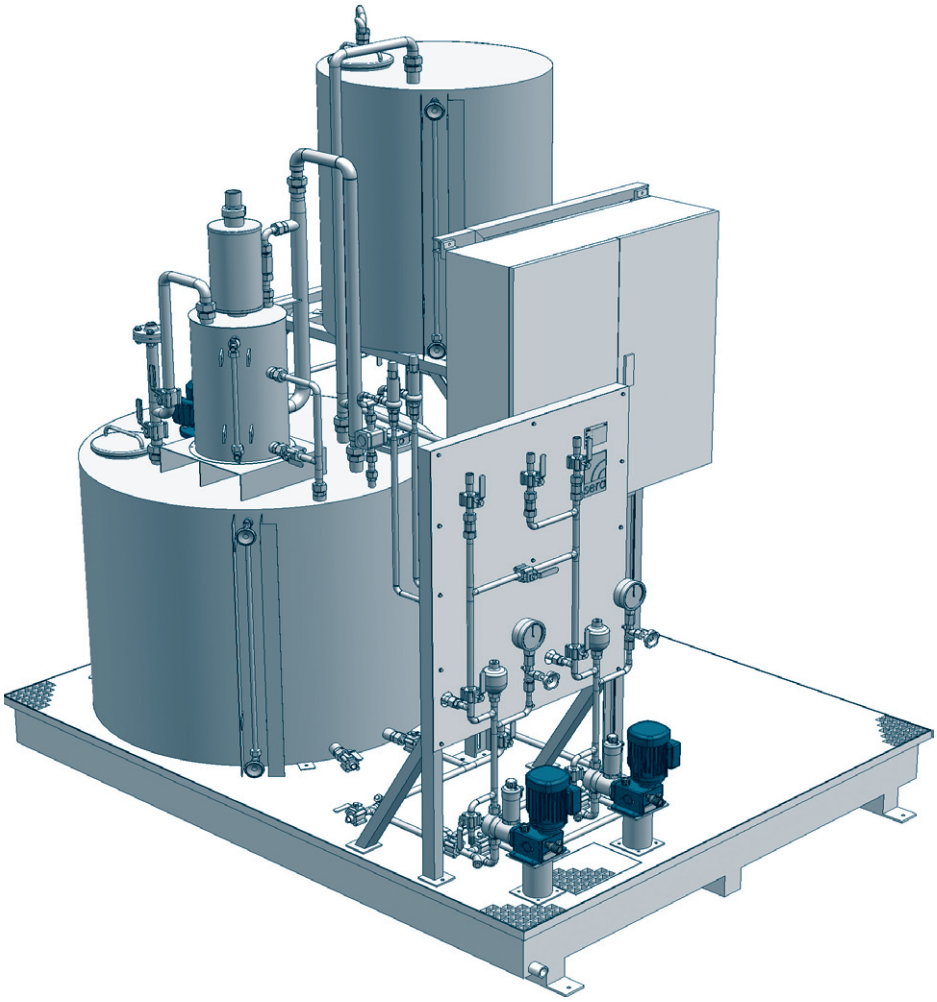

Technical key features*

Tank volumes	**Preparation tank:**	**up to 500 litres (~132 gallons)**
	Dosing tank:	**up to 5.000 litres (~1290 gallons)**
Quantity of dosing pumps	**any**	
Operating pressure	**up to 200 bar (2900 psi)**	
Operating mode	**continuous or charge wise**	
Preparation	**manual or automatic**	
Control	**for fully automatic dosage**	

* further designs on request

© 2015 **sera GmbH**
Subject to technical modifications.

1

Preparation units (e.g. for boiler feed water - chemicals)

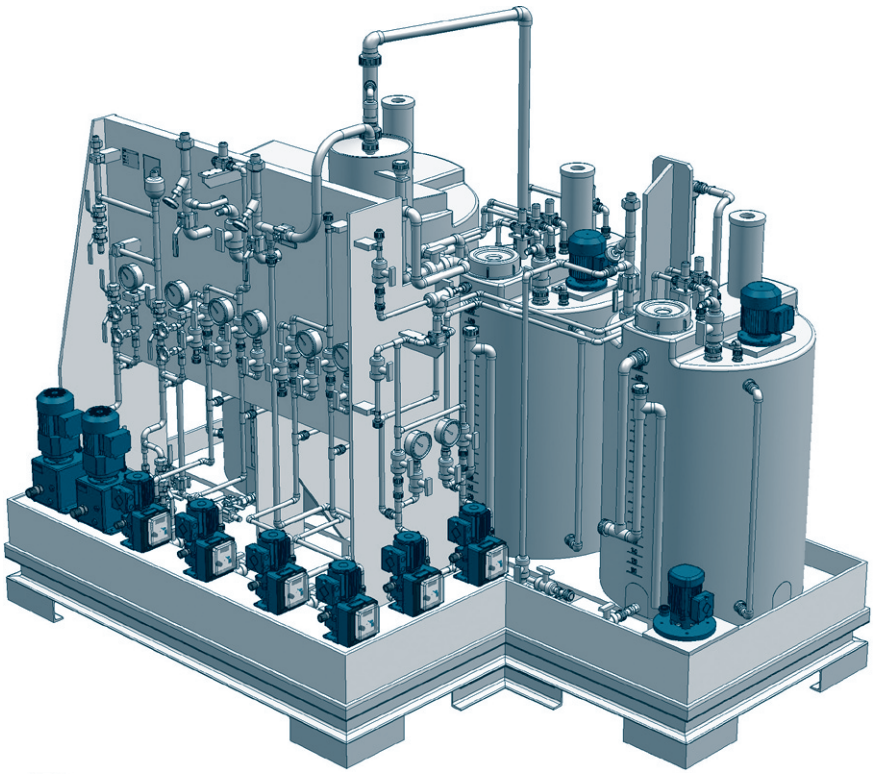

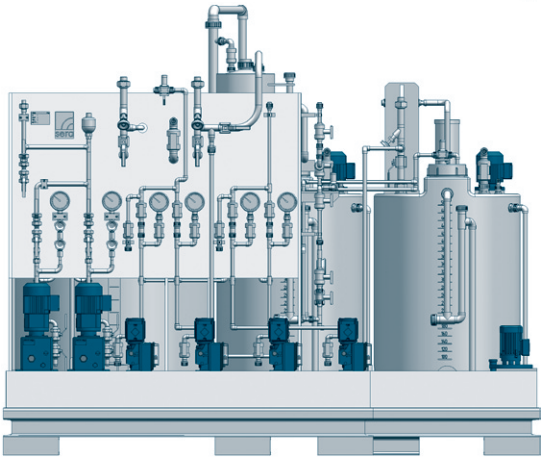

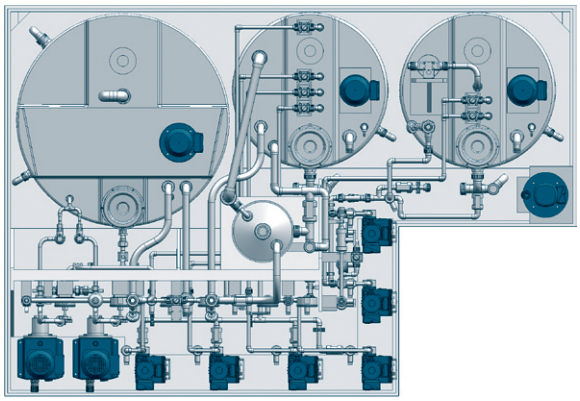

Technical key features*

Tank volumes	**up to 5.000 litres (~1.290 gallons)**
Quantity of tanks	**any**
Operating pressure	**up to 200 bar (2900 psi)**
Operation mode	**continuous or charge wise**
Preparation	**manual or automatic**
Control	**for fully automatic dosage**

* further designs on request

© 2015 **sera GmbH**
Subject to technical modifications.

Preparation- and dosing units (e.g. for suspensions, lime milk or clacium sulphate)

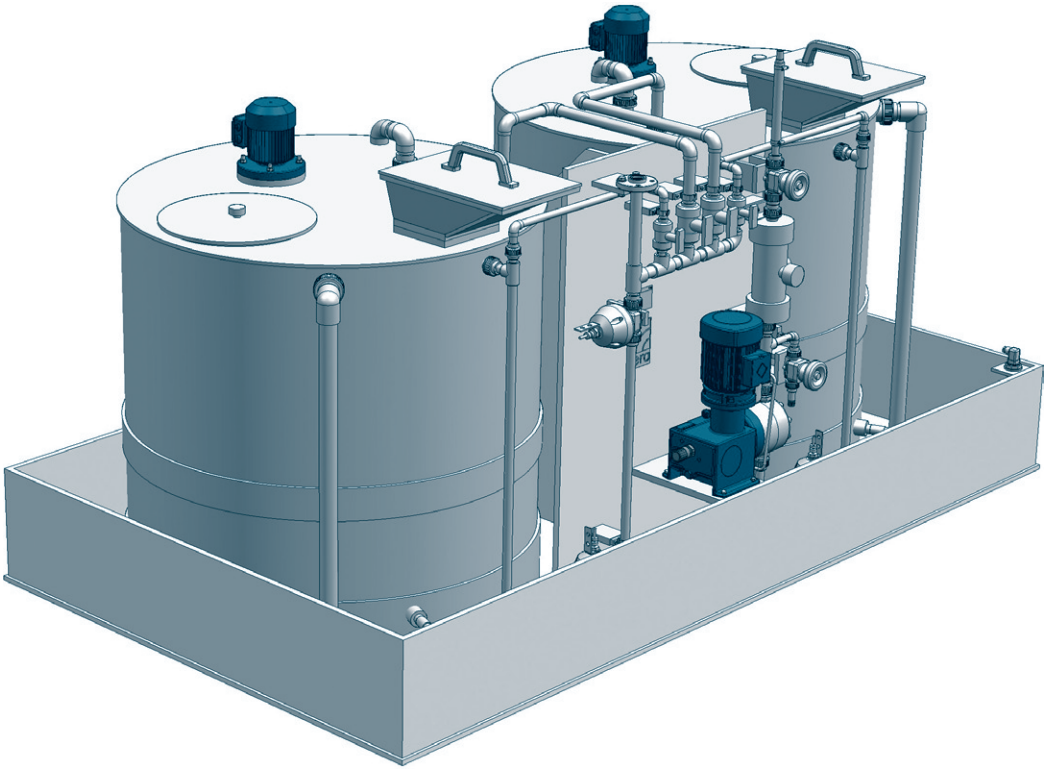

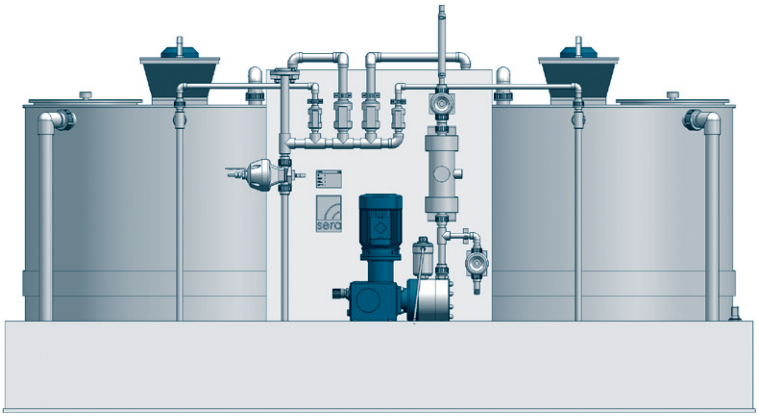

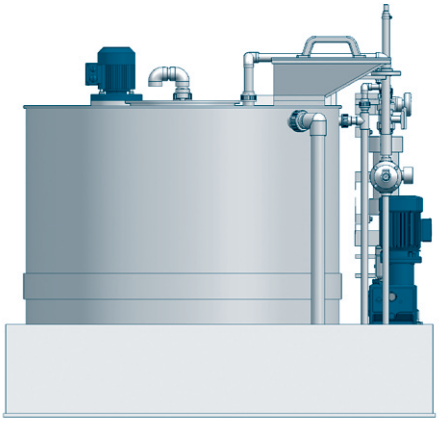

Technical key features*

Tank volumes	**up to 3.000 litres (~793 gallons)**
Quantity of dosing pumps	**any**
Operation pressure	**up to 10 bar (145 psi)**
Operation mode	**continuous or charge wise**
Preparation	**manual or automatic**
Control	**for fully automatic dosage**

* further designs on request

© 2015 **sera GmbH**
Subject to technical modifications.

1

Preparation units (e.g. for bulk commodit)

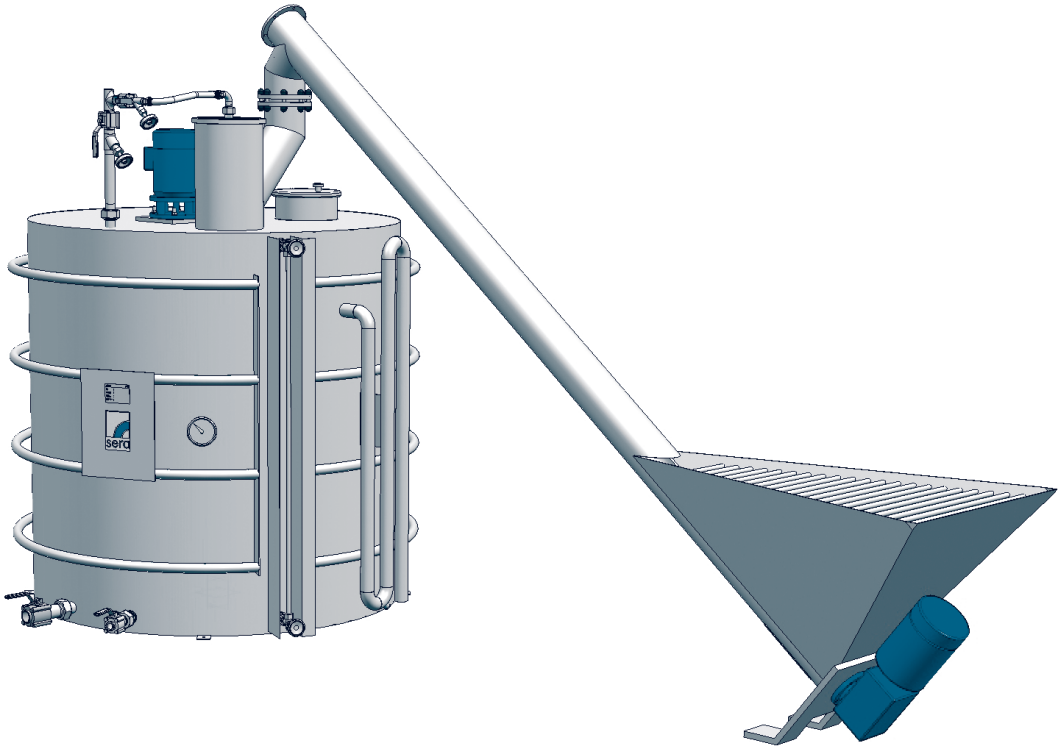

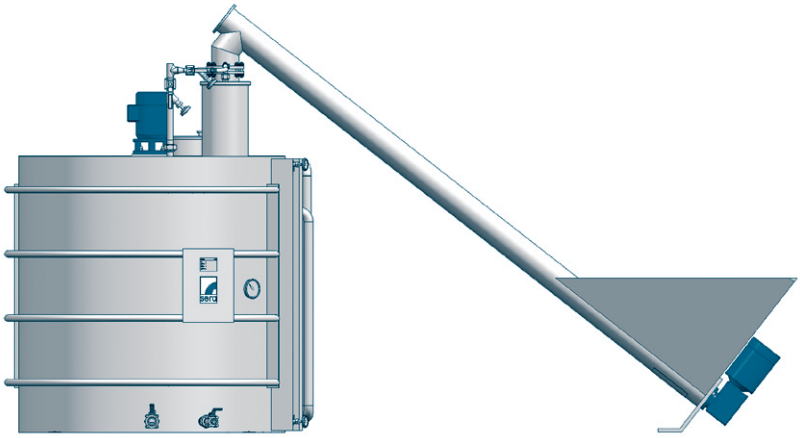

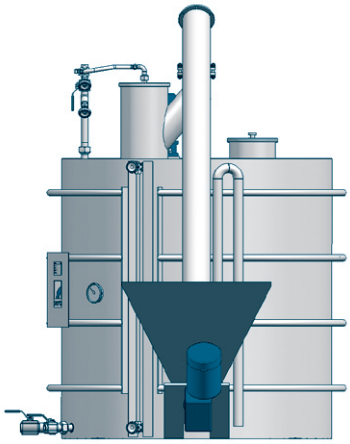

Technical key features*

Tank volumes	**up to 5.000 litres (~ 1.290 gallons)**
Operation mode	**continuous or charge wise**
Preparation	**manual or automatic**
Control	**for fully automatic dosage**

* further designs on request

© 2015 **sera GmbH**
Subject to technical modifications.

Preparation units for flocculants

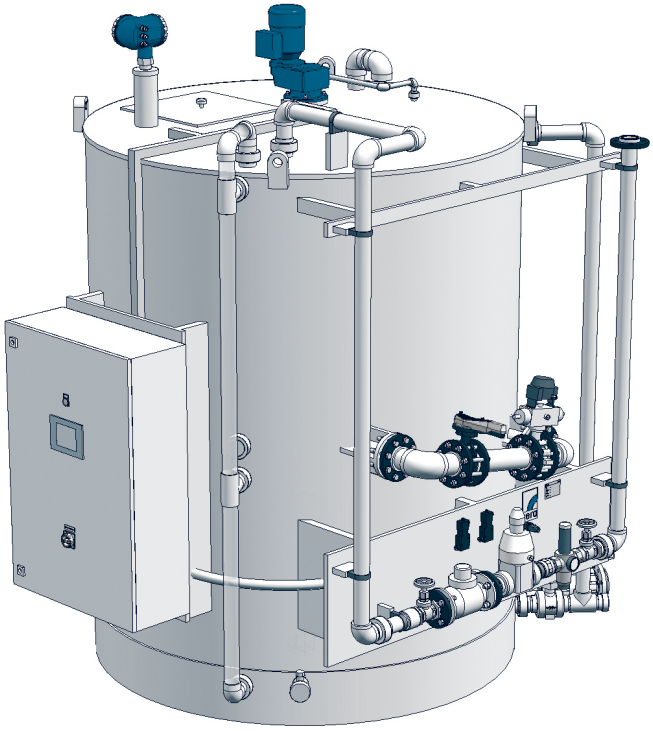

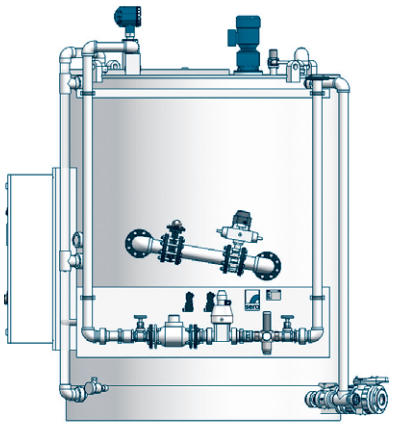

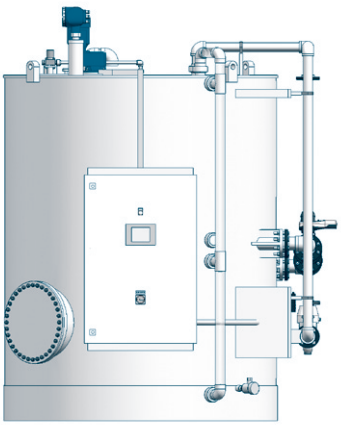

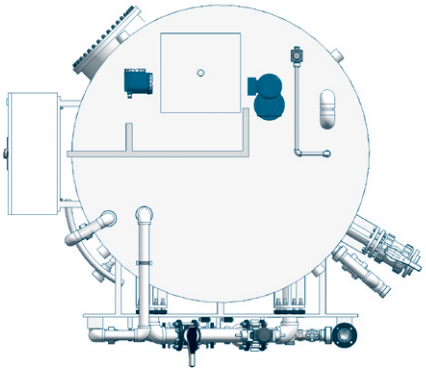

Technical key features*

Tank volumes	**up to 3.000 litres (~793 gallons)**
Operation mode	**continuous**
Preparation	**manual or automatic**
Control	**for fully automatic preparation of solution**

* further designs on request

© 2015 **sera GmbH**
Subject to technical modifications.

1

Preparation units (e.g. for suspensions, lime milk or calcium sulphate)

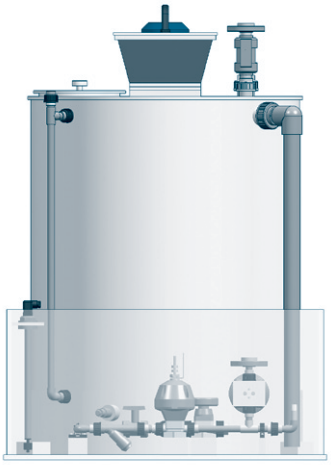

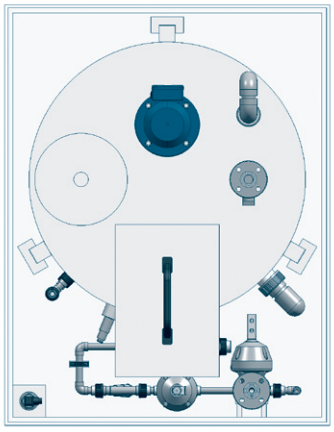

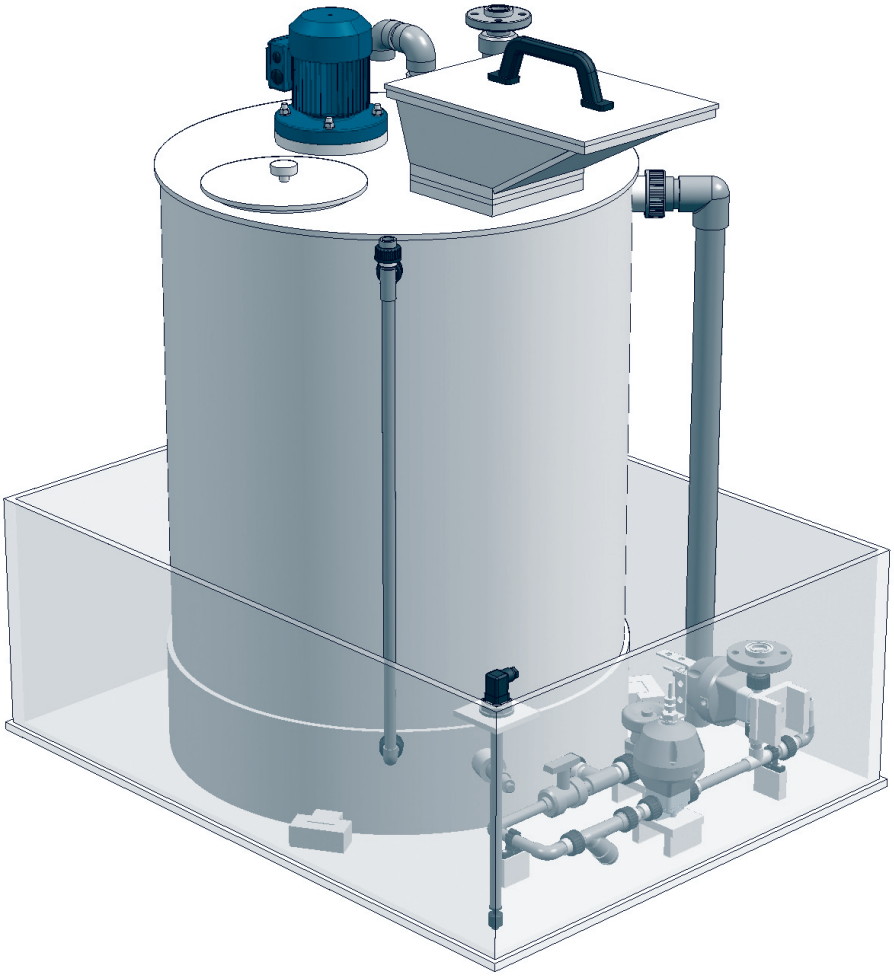

Technical key features*

Tank volumes	**up to 5.000 litres (~1.290 gallons)**
Quantity of dosing pumps	**any**
Operating pressure	**up to 10 bar (145 psi)**
Operating mode	**charge wise**
Preparation	**manual or automatic**
Control	**for fully automatic dosage**

* further designs on request

© 2015 **sera GmbH**
Subject to technical modifications.

Dosing stations (e.g. protection in closet for floor mounting, indoor installation)

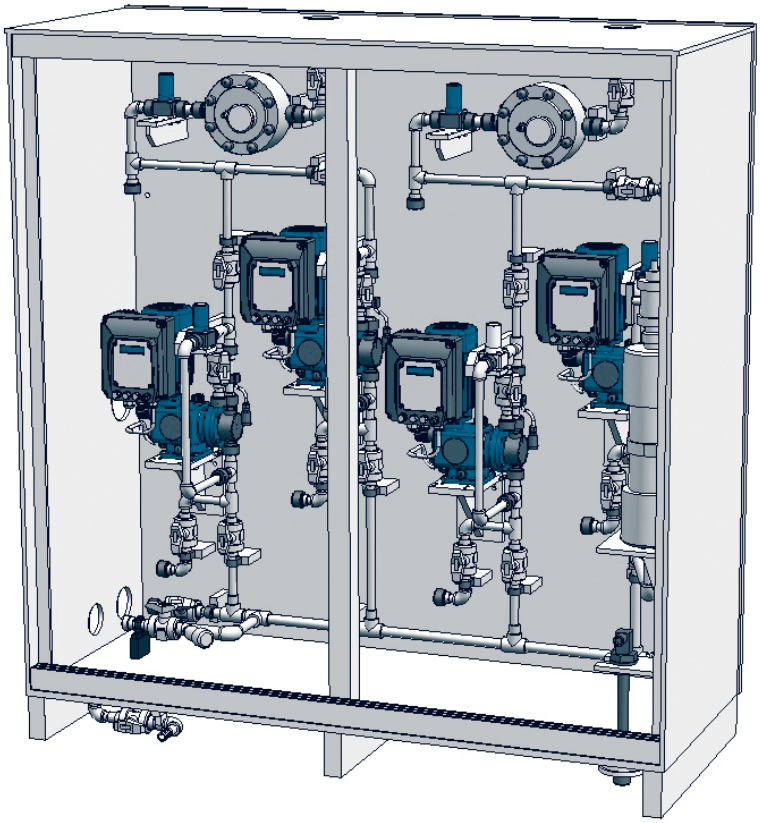

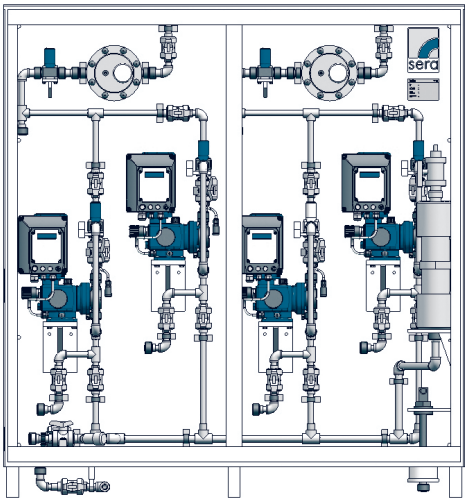

Technical key features*

Quantity of dosing pumps	**up to 6**
Operation pressure	**up to 200 bar (2900 psi)**
Delivery rates	**up to 1.500 litre / hour (~387 gallons / hour) each pump**
Operation mode	**continuous or charge wise**
Control	**for fully automatic dosage**

* further designs on request

© 2015 **sera GmbH**
Subject to technical modifications.

1

Storage- and dosing units (e.g. for water-endangering chemicals)

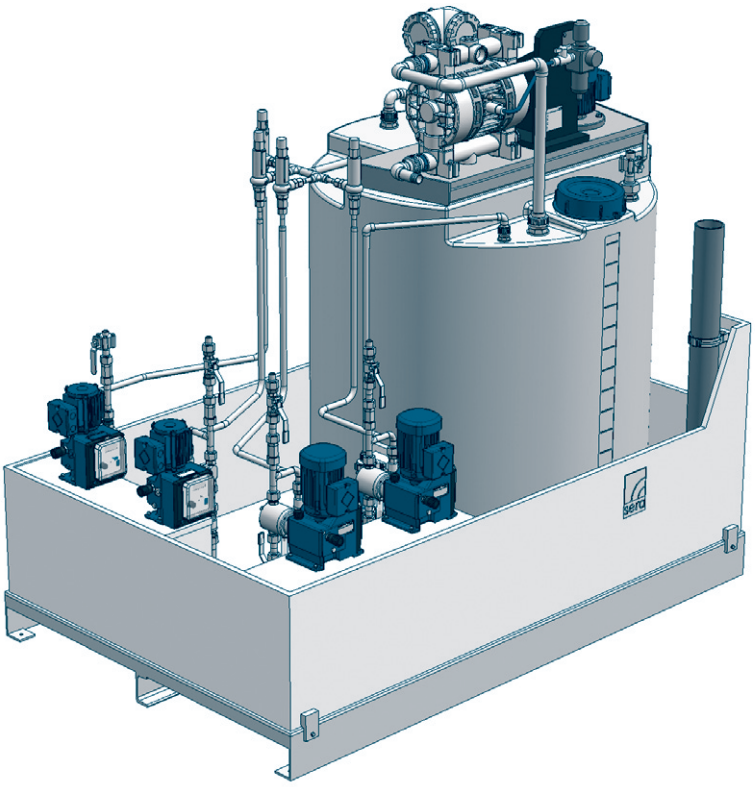

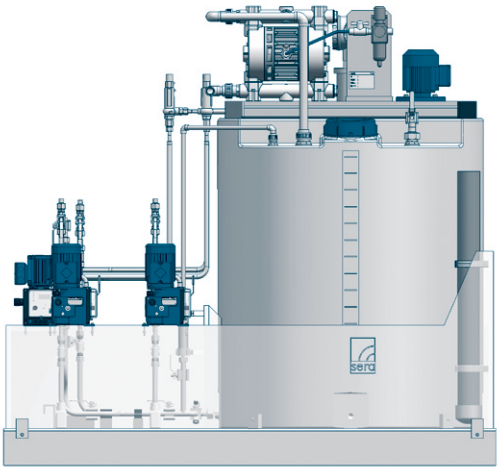

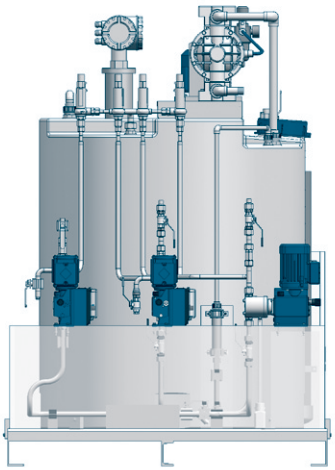

Technical key features*

Tank volumes	**up to 30.000 litres (~7.440 gallons)**
Quantity of dosing pumps	**any**
Operation pressure	**up to 200 bar (2900 psi)**
Operation mode	**continuous or charge wise**
Control	**for fully automatic dosage**

* further designs on request

© 2015 **sera GmbH**
Subject to technical modifications.

Storage- and dosing units (e.g. for water-endangering chemicals, outdoor installation)

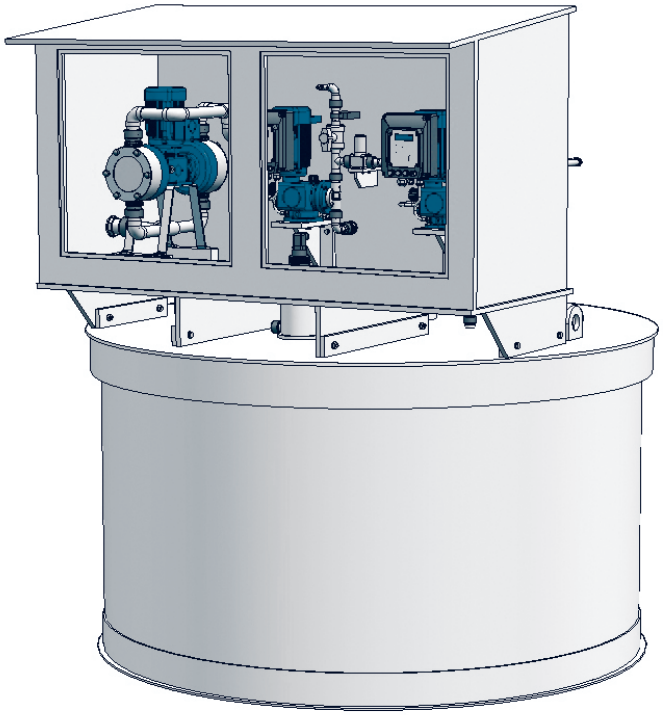

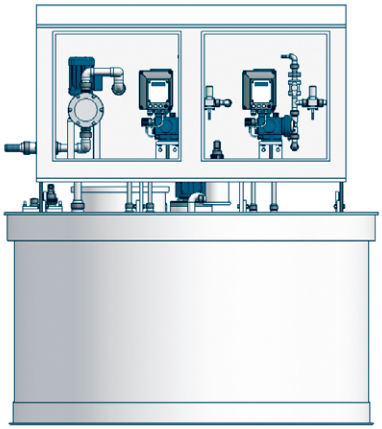

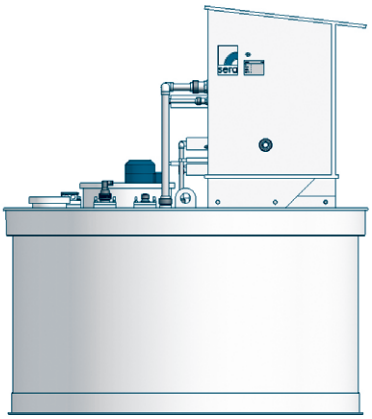

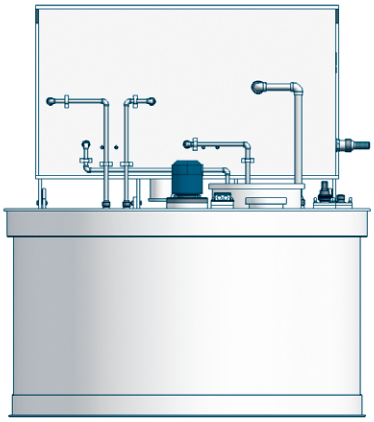

Technical key features*

Tank volumes	**up to 5.000 litres (~1.290 gallons)**
Quantity of dosing pumps	**any**
Operation pressure	**up to 200 bar**
Operation mode	**continuous or charge wise**
Control	**for fully automatic dosage**

* further designs on request

© 2015 **sera GmbH**
Subject to technical modifications.

1

Dosing units (e.g. mobile dosing unit)

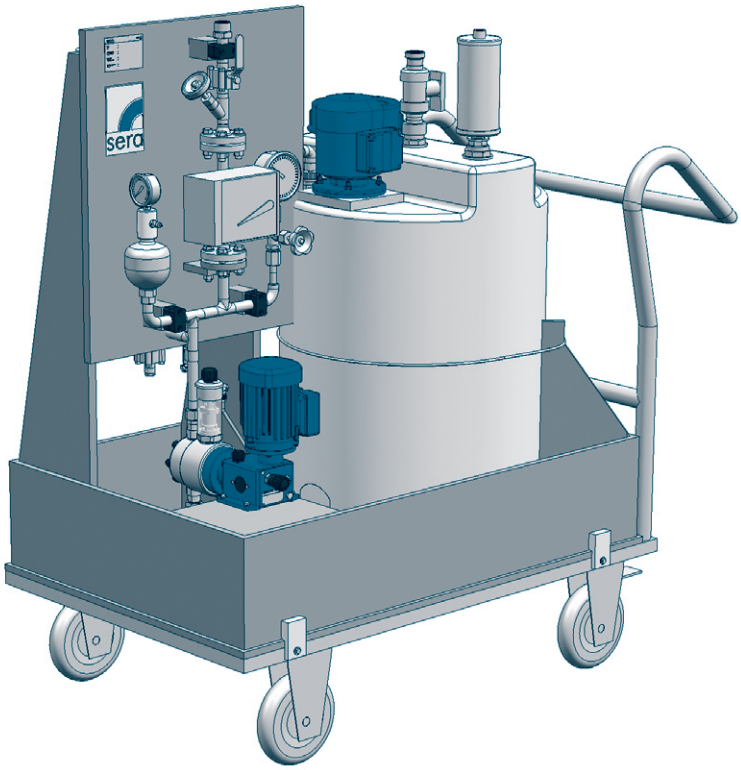

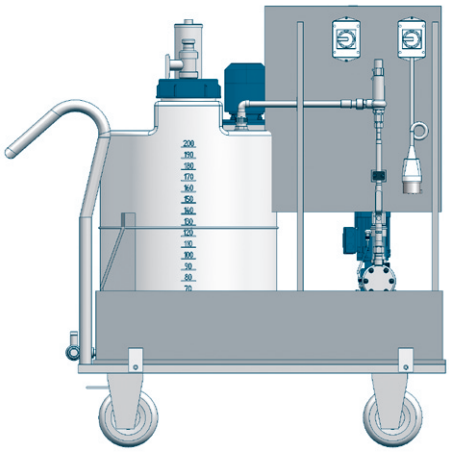

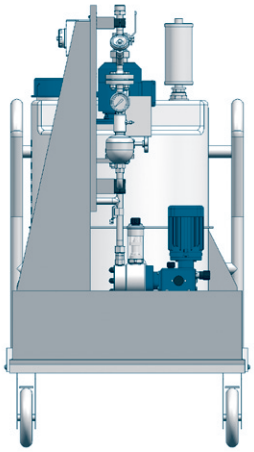

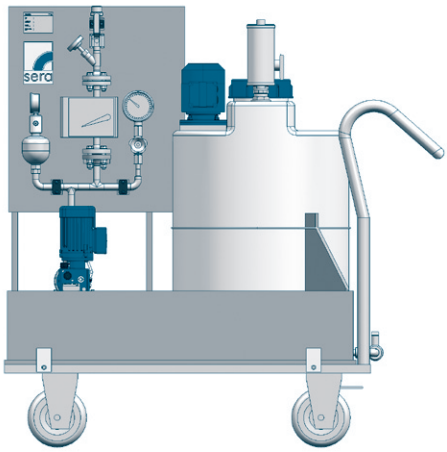

Technical key features*

Quantity of dosing pumps	**1**
Operation pressure	**up to 200 bar (2900 psi)**
Delivery rates	**up to 1.500 litres / hour (~387 gallons / hour)**
Operating mode	**continuous or charge wise**
Control	**for fully automatic dosage**

* further designs on request

© 2015 **sera GmbH**
Subject to technical modifications.

Dosing units (e.g. with protective roof for outdoor installation)

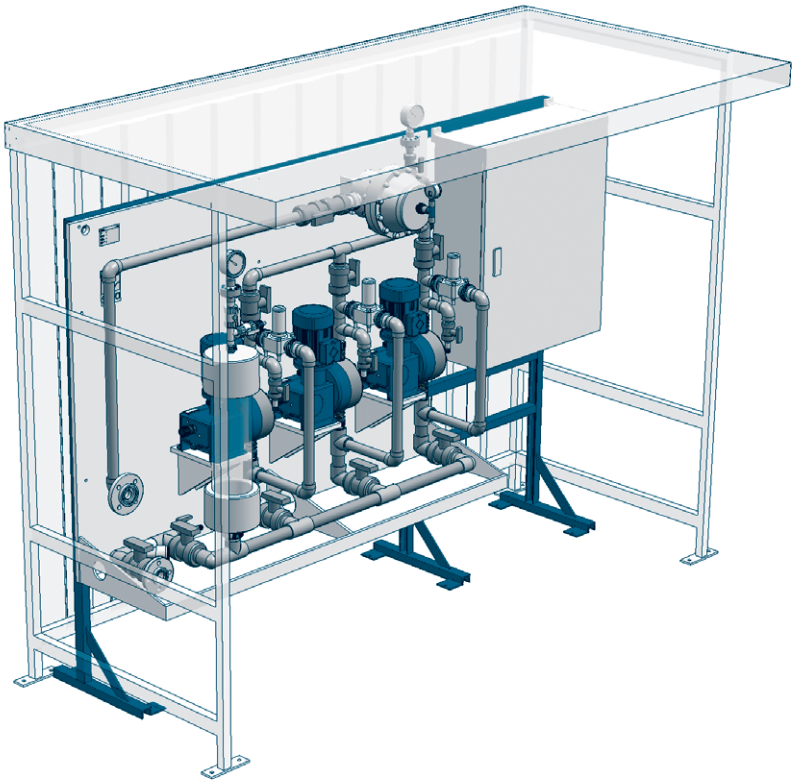

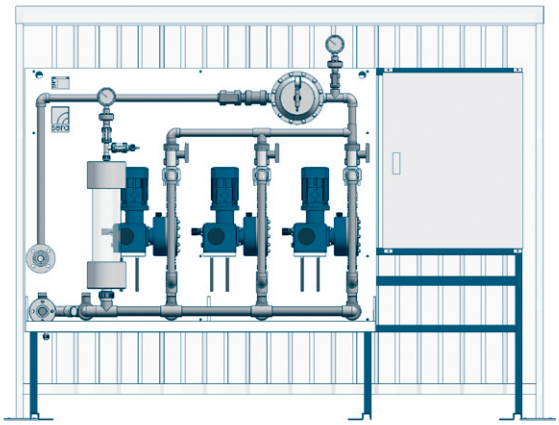

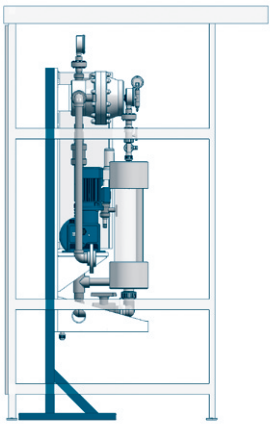

Technical key features*

Quantity of dosing pumps	**up to 4**
Operating pressure	**up to 200 bar (2900 psi)**
Delivery rates	**up to 1.500 litre / hour (~387 gallons / hour) each pump**
Operating mode	**continuous or charge wise**
Control	**for fully automatic dosage**

* further designs on request

© 2015 **sera GmbH**
Subject to technical modifications.

1

Dosing units (e.g. for wall mounting, indoor installation)

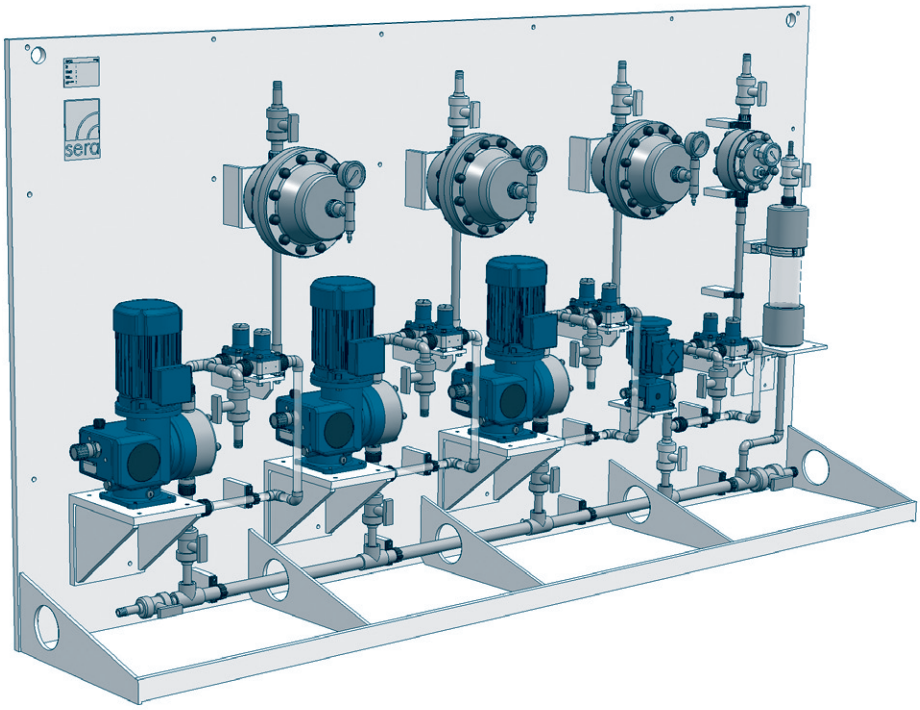

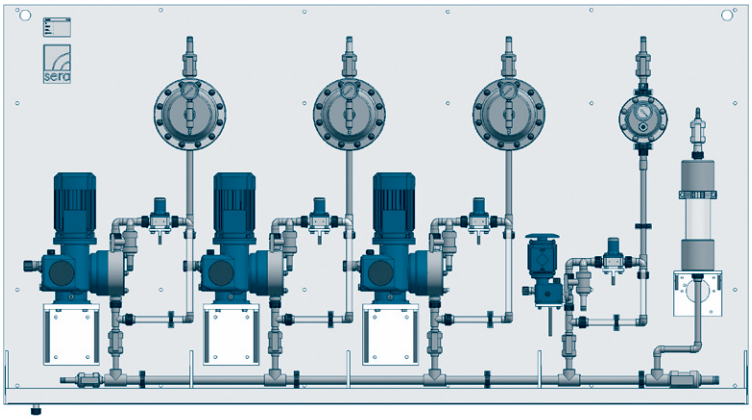

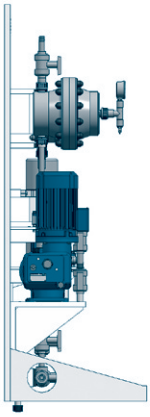

Technical key features*

Quantity of dosing pumps	**up to 6**
Operating pressure	**up to 200 bar (2900 psi)**
Delivery rates	**up to 1.500 litre / hour (~387 gallons / hour) each pump**
Operating mode	**continuous or charge wise**
Control	**for fully automatic dosage**

* further designs on request

© 2015 **sera GmbH**
Subject to technical modifications.

Dosing units (e.g. for bottom mounting, indoor installation)

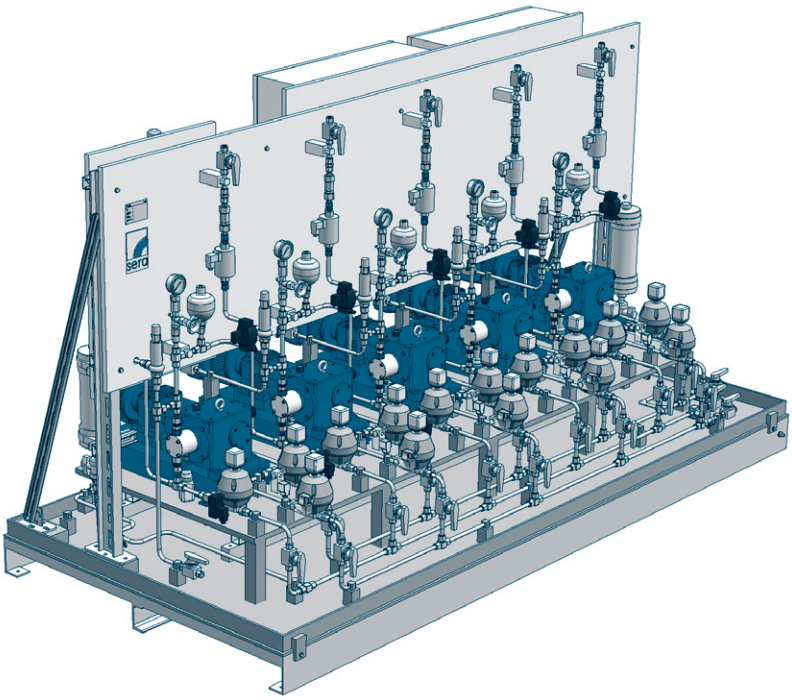

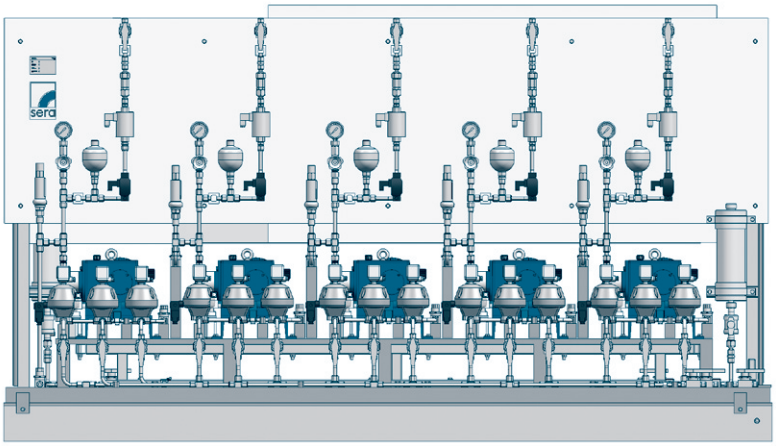

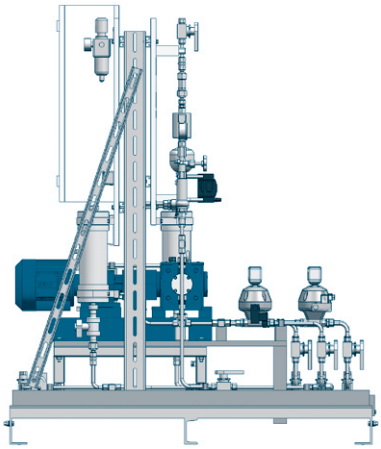

Technical key features*

Quantity of dosing pumps	**any**
Operating pressure	**up to 200 bar (2900 psi)**
Delivery rates	**up to 1.500 litre / hour (~387 gallons / hour) each pump**
Operating mode	**continuous or charge wise**
Control	**for fully automatic dosage**

* further designs on request

© 2015 **sera GmbH**
Subject to technical modifications.

© 2015 **sera GmbH**
Subject to technical modifications.

Accessories for Dosing units and -systems		Series	Page
	Dosing tanks	Round tanks made of PE Collecting basins	1.44
	Mixer and agitators	Electric agitator	1.46
	Dry Material Feeder	Dry Material Feeder (DMF)	1.48
	Analytical measurement	AQUASENSO®	1.50

© 2015 **sera GmbH**
Subject to technical modifications.

Tank

Tank in survey

- UV-stabilized polyethylene, food safe
- Seamless
- Assembly bridge, centred
- Embossed litre scale
- Connection for drain
- Safe fixing
- Lockable

Infobox

Resistance chart Chapter 5
Installation examples Chapter 5

1

Technical data / Order information

Type	Content Litres	Content Gallons	Material	Weight (kg, empty)	Article-No.	x
DTR - 40.2	40	10,57	PE-transparent	2,7	90020788	
DTR - 75.2	75	19,81	PE-transparent	6,0	90032463	
DTR - 100.2	100	26,42	PE-transparent	7,5	90032464	
DTR - 200.2	200	53	PE-transparent	13,5	90032213	
DTR - 300.2	300	79	PE-transparent	17,0	90032216	
DTR - 500.1	500	132	PE-transparent	23,8	90009622	
DTR - 1000.1	1000	264	PE-transparent	42,0	90009623	

Dimensional drawing

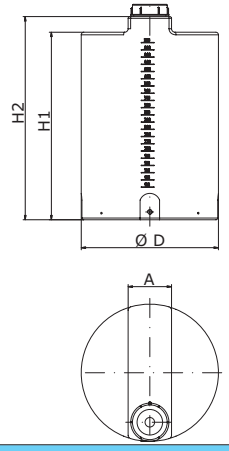

Dimensional chart

Indications in mm / inch

Type	D mm	D in	H1 mm	H1 in	H2 mm	H2 in	A mm	A in
DTR - 40.2	420	16,54	355	13,98	425	16,73	150	5,91
DTR - 75.2	460	18,11	530	20,87	600	23,62	130	5,12
DTR - 100.2	460	18,11	690	27,17	760	29,92	130	5,12
DTR - 200.2	670	26,38	670	26,38	750	29,53	200	7,87
DTR - 300.2	670	26,38	950	37,40	1030	40,55	200	7,87
DTR - 500.1	790	31,10	1090	42,91	1180	46,46	250	9,84
DTR - 1000.1	1080	42,52	1260	49,61	1330	52,36	370	14,57

Options/Accessories		40	x	75	x	100	x	200	x	300	x	500	x	1000	x
Sealings EPDM		●		●		●		●		●		●		●	
Sealings FPM		▲		▲		▲		▲		▲		▲		▲	
Level indicator made of PVC-transparent		▲		▲		▲		▲		▲		▲		▲	
Tank evacuation	with ball cock DN15	▲		▲		▲		▲		▲		▲		▲	
	blind closing, DN15, G1	▲		▲		▲		▲		▲		▲		▲	
Tank screwed connection incl. connection seal		▲		▲		▲		▲		▲		▲		▲	
Colour	black (non transparent)	▲		▲		▲		▲		▲		▲		▲	
Reinforcing bridge		–		–		–		–		–		–		▲	

We are ready to offer tanks with more than 1000 l contents on request. Furthermore we can supply tanks made of black PE, PP, PVC-FRP, 1.4571* as well as tanks with test mark acc. to WHG § 19 h (Water Resources Act).

● = Basis design – = not available ▲ = with add. price ✆ = on request ❍ = without add. price Art.-No. = available in basic design/ accessories

© 2015 **sera GmbH**
Subject to technical modifications.

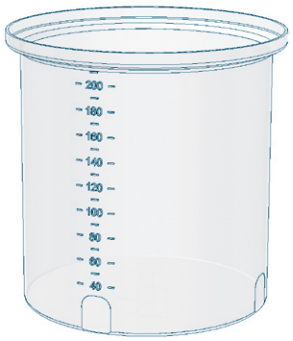

Collecting basin in survey

- for tank size up to 1000 litre (264 gallons)
- UV-stabilized polyethylene, food safe
- Seamless
- Embossed litre scale
- Flat spots for the mounting of fittings

Infobox

Resistance chart Chapter 5
Installation examples Chapter 5

Technical data / Order information

Type	Content		for tank	Material	x	Article-No.	x
	Litre	Gallons					
CBR - 60.1	60	15,85	DTR - 40.2	PE-transparent		90032796	
CBR - 80.1	80	21,13	DTR - 75.2	PE-transparent		90028426	
CBR - 120.1	120	31,70	DTR - 100.2	PE-transparent		90028427	
CBR - 260.1	260	69	DTR - 200.2	PE-transparent		90032797	
CBR - 400.1	400	106	DTR - 300.2	PE-transparent		90019776	
CBR - 500.1	500	132	DTR - 500.1	PE-transparent		90028429	
CBR - 1000.1	1000	264	DTR - 1000.1	PE-transparent		90028430	

Dimensional drawing

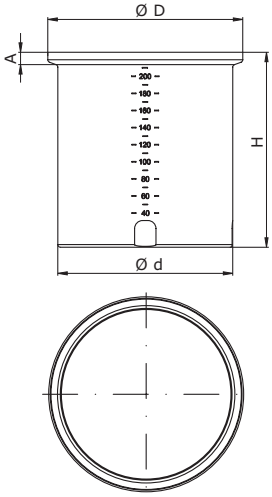

Dimensional chart
Indications in mm / inch

Type	d		D		H		A		Gewicht (kg)
	mm	in	mm	in	mm	in	mm	in	
CBR - 60.1	500	19,69	---	---	350	13,78	---	---	3,6
CBR - 80.1	500	19,69	560	22,05	545	21,46	40	1,57	5,0
CBR - 120.1	500	19,69	560	22,05	705	27,76	40	1,57	6,7
CBR - 260.1	770	30,31	---	---	650	25,59	---	---	10,0
CBR - 400.1	770	30,31	860	33,86	960	37,80	45	1,77	16,0
CBR - 500.1	860	33,86	960	37,80	980	38,58	40	1,57	19,0
CBR - 1000.1	1150	45,28	1240	48,82	1080	42,52	50	1,97	34,0

© 2015 **sera GmbH**
Subject to technical modifications.

Electric agitator

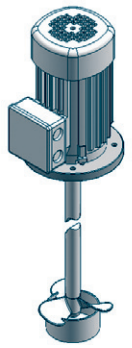

Electric agitator in survey

- Speed up to 1500 rpm
- Balanced agitator
- Suitable for continuous operation
- Suitable for pass-through operation
- No-maintenance
- Impeller can be unbolted
- Controllable (Option)
- High quality materials
- For viscosity ≤200 mPas
- Max. density 1,2 kg/dm³

Infobox

Resistance chart Chapter 5

Technical data / Order information

Type	for tank (content)		Shaft length		Speed* (min⁻¹)	Price (EUR) Article-No.	x
	Litres	Gallons	mm	in			
MU-100E1500.1	100	26	564	22,40	1500	83001881	
MU-200E1500.1	200	53	572	22,52	1500	83001834	
MU-300E1500.1	300	79	822	32,36	1500	83001874	
MU-500E1500.1	500	132	974	38,19	1500	83001886	
MU-1000E1500.1	1000	264	1069	41,65	1500	83001917	

*) Synchronous speed

Dimensional drawing

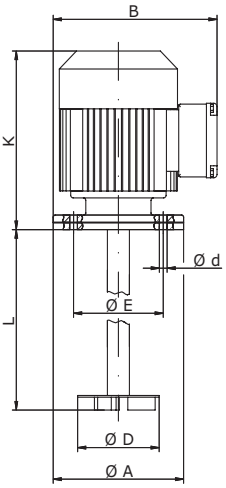

Electrical data (Drive)	MU-100E 1500.1	MU-200E 1500.1	MU-300E 1500.1	MU-500E 1500.1	MU-1000E 1500.1
Drive output	0,18 kW	0,18 kW	0,18 kW	0,37 kW	0,75 kW
Voltage	230/400 V, 50 Hz				
Protection category	IP 55				
Iso-class	F				

Dimensional chart

Indications in mm / inch

Type	L		A		B		d		D		E		K		Weight (~ kg)
	mm	in	mm	in	mm	in	mm	in	mm	in	mm	in	mm	in	
MU-100...	569	22,40	120	4,72	102	4,02	7	0,28	100	3,94	100	3,94	223	8,78	6,6
MU-200...	572	22,52	160	6,30	102	4,02	8,5	0,34	100	3,94	130	5,12	220	8,66	6,8
MU-300...	822	32,36	160	6,30	102	4,02	8,5	0,34	100	3,94	130	5,12	220	8,66	7,6
MU-500...	970	38,19	160	6,30	108	4,25	8,5	0,34	125	4,92	130	5,12	241	9,49	8,0
MU-1000...	1058	41,65	200	7,87	123	4,84	11	0,43	150	5,91	165	6,50	304	11,97	19,4

Options/Accessories		MU-100E 1500.1	x	MU-200E 1500.1	x	MU-300E 1500.1	x	MU-500E 1500.1	x	MU-1000E 1500.1	x
Electronics	Programmable control inputs and outputs. Digital inputs from a PLC or contact signal-controlled. Voltage: 210-250V (50/60 Hz) Connection cable: Length app. 2m with plug	▲		▲		▲		▲		–	
Materials	Shaft: 1.4571 Mixing organ: 1.4571	●		●		●		●		●	
	Shaft: 1.4571, PE-covered Mixing organ: PVDF	▲		▲		▲		▲		▲	
Protective flange	PE	●		●		●		●		●	
	Stainless steel	▲		▲		▲		▲		▲	
Gas-tight design		–		▲		▲		▲		▲	
Special voltage		✆		✆		✆		✆		✆	
Agitator traverse	for IBC-Container	▲		▲		▲		▲		▲	
Fixing set		▲		▲		▲		▲		▲	

● = Basis design – = not available ▲ = with add. price ✆ = on request ❍ = without add. price Art.-No. = available in basic design/ accessories

© 2015 sera GmbH
Subject to technical modifications.

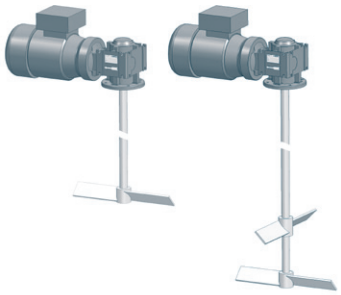

Electric agitator in survey

- Speed 180 rpm (constant)
- Balanced agitator
- Suitable for continuous operation
- No-maintenance
- Impeller(s) can be unbolted
- High quality materials
- For viscosity ≤500 mPas
- Max. density 1,2 kg/dm³

Infobox

Resistance chart Chapter 5

Technical data / Order information

Type	for tank (content)		Shaft length		Speed (min⁻¹)	Article-No.	x
	Litres	Gallons	mm	in			
MU-200E180.1	200	53	573	22,56	180	83001926	
MU-300E180.1	300	79	823	32,40	180	83001894	
MU-500E180.1	500	132	975	38,39	180	83001893	
MU-1000E180.1	1000	264	1075	42,32	180	83001892	

Agitators unsuitable for pass-through operation

Dimensional drawing

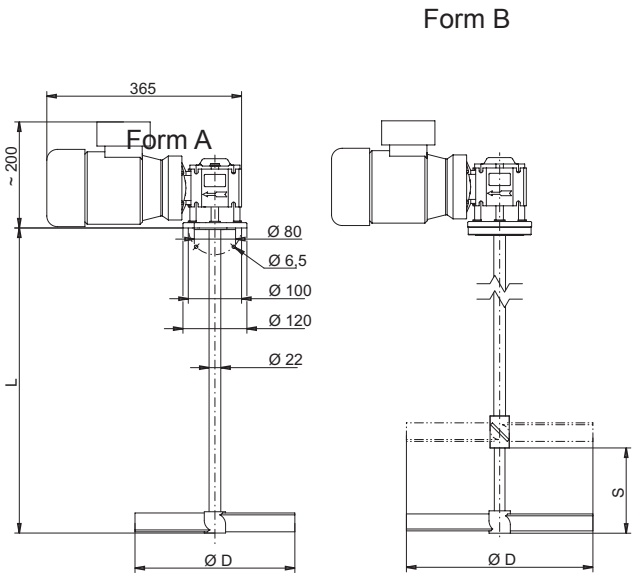

Electrical data (Drive)	MU-...E180.1
Drive output	0,37 kW
Voltage	230/400 V, 50 Hz
Protection category	IP 55
Iso-class	F

Dimensional chart

Indications in mm / inch

Type	Form	L		D		S		Weight (~ kg)
		mm	in	mm	in	mm	in	
MU-200E180.1	A	573	22,56	300	11,81	---	---	12,4
MU-300E180.1	B	823	32,40	300	11,81	150	5,91	14,1
MU-500E180.1	B	975	38,39	350	13,78	160	6,30	14,6
MU-1000E180.1	B	1075	42,32	350	13,78	210	8,27	14,9

Options/Accessories		MU-200E 180.1	x	MU-300E 180.1	x	MU-500E 180.1	x	MU-1000E 180.1	x
Materials	Shaft: 1.4571 Mixing organ: 1.4571	●		●		●		●	
Gas-tight design	Sealing flange PE	▲		▲		▲		▲	
	Sealing flange stainless steel	▲		▲		▲		▲	
Special voltage		✆		✆		✆		✆	

● = Basis design — = not available ▲ = with add. price ✆ = on request ❍ = without add. price Art.-No. = available in basic design/ accessories

© 2015 **sera GmbH**
Subject to technical modifications.

Dry material feeder (DMF)

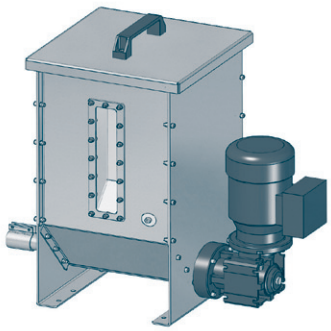

DMF in survey

- Compact design
- Linear performance curves
- For pourable, non-bridging media
- High dosing accuracy
- Mounted-on ribbon pan
- Sealing between filling space and drive
- No-maintenance
- Easy to operate

Infobox

Resistance chart Chapter 5

Technical data / Order information

Type	Capacity		Drive Power	Nominal speed	for dry material		Reservoir volume	Weight (empty)
	l/h	gal/h	kW	min^{-1}	Density kg/l	Grain size mm	Liter	kg
DMF-5.2	5	1,32	0,09	17	0,5-1,2	1,5	35	30
DMF-20.2	20	5,28	0,18	68	0,5-1,2	1,5	35	30
DMF-50.2	50	13,21	0,09	17	0,5-1,2	1,5	35	30
DMF-200.2	200	52,84	0,18	68	0,5-1,2	1,5	35	30

Dimensional drawing

mm (inch)

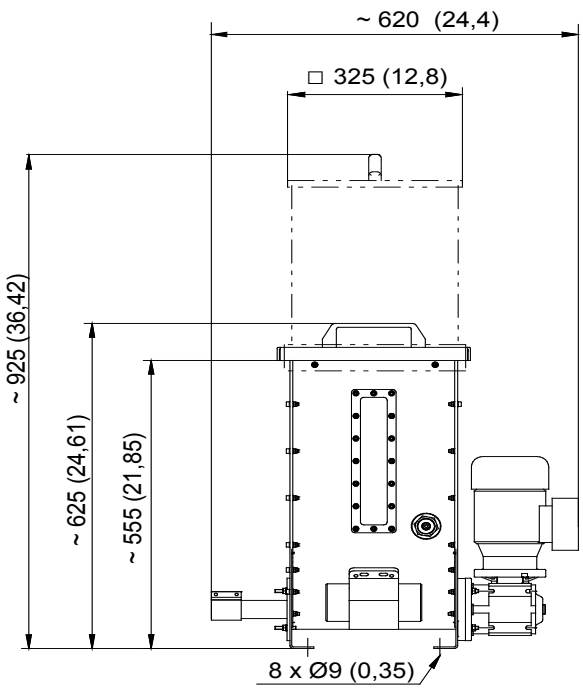

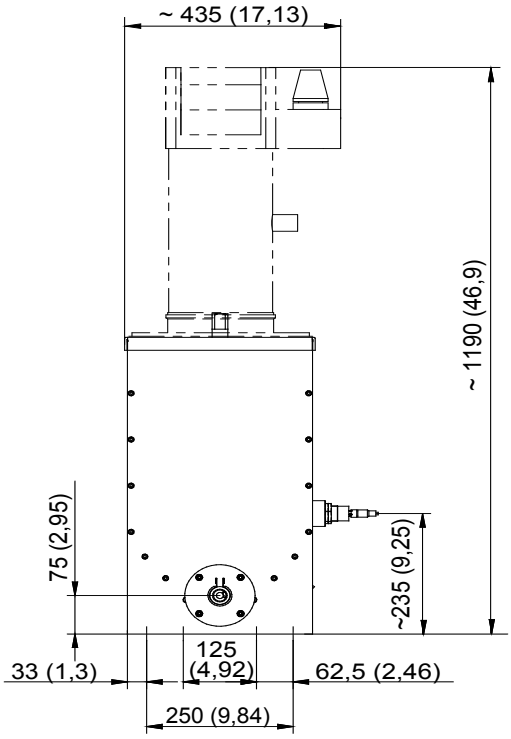

Options/Accessories		DMF-...	x
Hopper extension	Volume expansion: 25 liters (6,61 gallons)	▲	
Sensors	Empty signal for hopper	▲	
Electric external vibrator		▲	
Conveyor unit		▲	
DMF-...EB	with integrated control electronics	✆	

● = Basis design – = not available ▲ = with add. price ✆ = on request ❍ = without add. price Art.-No. = available in basic design/ accessories

© 2015 **sera GmbH**
Subject to technical modifications.

© 2015 **sera GmbH**
Subject to technical modifications.

AQUASENSO® in survey

- 2 channels
- Continuous measurement and control
- pH, Redox, conductivity, chlorine adjustable
- Selectable control direction

Infobox

Resistance chart Chapter 5
Installation examples Chapter 5

Technical data

Type	Measuring range	Accuracy	Compensation	Control mode	Controller	Analog output	Control output
AQUASENSO®	*pH:* 0,00...14,00 *Redox-potential:* -2000...+2000 mV *Chlorine:* -1000...+0 mV *Conductivity:* 50 µs/cm... 5ms/cm *Temperature:* over Pt 100	5% based on the measured range end	pH Temperature compensated, Chlorine pH compensated	P/PI/PID	2 side controller	2 x 0/4...20mA splitted, max. liability 450	1x2 pulse frequency out-puts 2x2 Relays

Dimensional drawing

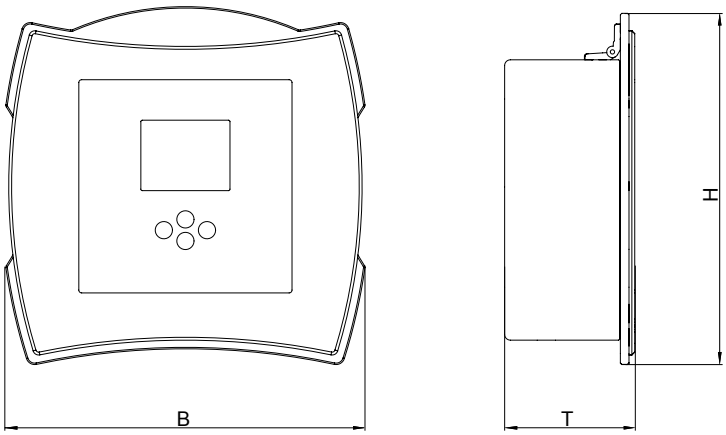

Dimensional chart
Indications in mm / inch

Type	B		T		H	
	mm	in	mm	in	mm	in
AQUASENSO®	~250	~9,84	~95	~3,74	~250	~9,84

Elektrical data

Type	Alarm relay	Electric connector	Power input	Environmen-tal temperature	Enclosure type	Material box
AQUASENSO®	250 V - 3 A, 700 VA Contact type changer	90-253 VAC, 50/60 Hz, 24 VDC, 12 VDC	25 VA	2...45 °C	Wall constuction: IP 67	PC with flame protection equipment

© 2015 **sera GmbH**
Subject to technical modifications.

Order information

Basic design

- AQUASENSO®
- Sensors in different packages (see table)

Options	Article - No.	AQUASENSO®	pH Sensor EGA133 incl. cable	pH Sensor EGA150 incl. cable	pH Sensor EGA153 incl. cable	Redox Sensor EMC133 incl. cable	Redox Sensor EMC173 incl. cable	Chlorine Sensor CS2 incl. cable	Conduc-tivity LTG1 incl. cable	Tem-perature Pt100 incl. cable	Flow fitting 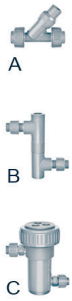 depending on package
Controller											
AQUASENSO®	90038537	●	Controller without sensor = Minimum order 10 pieces								
pH											
pH-Package 01	90038876	●	●	–	–	–	–	–	–	–	–
pH-Package 02	90038877	●	●	–	–	–	–	–	–	–	A
pH-Package 03	90038878	●	–	●	–	–	–	–	–	–	–
pH-Package 04	90038879	●	–	●	–	–	–	–	–	–	A
pH-Package 05	90038880	●	–	–	●	–	–	–	–	–	–
pH-Package 06	90038881	●	–	–	●	–	–	–	–	–	A
pH-Package 07	90038882	●	●	–	–	–	–	–	–	●	–
pH-Package 08	90038883	●	●	–	–	–	–	–	–	●	C
pH-Package 09	90038884	●	–	●	–	–	–	–	–	●	–
pH-Package 10	90038885	●	–	●	–	–	–	–	–	●	C
pH-Package 11	90038886	●	–	–	●	–	–	–	–	●	–
pH-Package 12	90038887	●	–	–	●	–	–	–	–	●	C
Redox											
Redox-Package 01	90038888	●	–	–	–	●	–	–	–	–	–
Redox-Package 02	90038889	●	–	–	–	●	–	–	–	–	A
Redox-Package 03	90038890	●	–	–	–	–	●	–	–	–	–
Redox-Package 04	90038891	●	–	–	–	–	●	–	–	–	A
Redox-Package 05	90038892	●	–	–	–	●	–	–	–	●	–
Redox-Package 06	90038893	●	–	–	–	●	–	–	–	●	C
Redox-Package 07	90038894	●	–	–	–	–	●	–	–	●	–
Redox-Package 08	90038895	●	–	–	–	–	●	–	–	●	C
Chlorine											
Chlorine-Package 01	90038898	●	–	–	–	–	–	●	–	–	B
Chlorine-Package 02	90038899	●	●	–	–	–	–	●	–	●	B+C
Conductivity											
Conductivity-Package 01	90038896	●	–	–	–	–	–	–	●	–	–
Conductivity-Package 02	90038897	●	–	–	–	–	–	–	●	–	A
Accessories											
Buffer solution for pH7 (green)					0,25 liter						
Buffer solution for pH4 (red)					0,25 liter						
Buffer solution for Redox					0,25 liter						
Calibration solution for conductivity					0,25 liter						

● = Basis design – = not available ▲ = with add. price ✆ = on request ❍ = without add. price Art.-No. = available in basic design/ accessories

© 2015 **sera GmbH**
Subject to technical modifications.

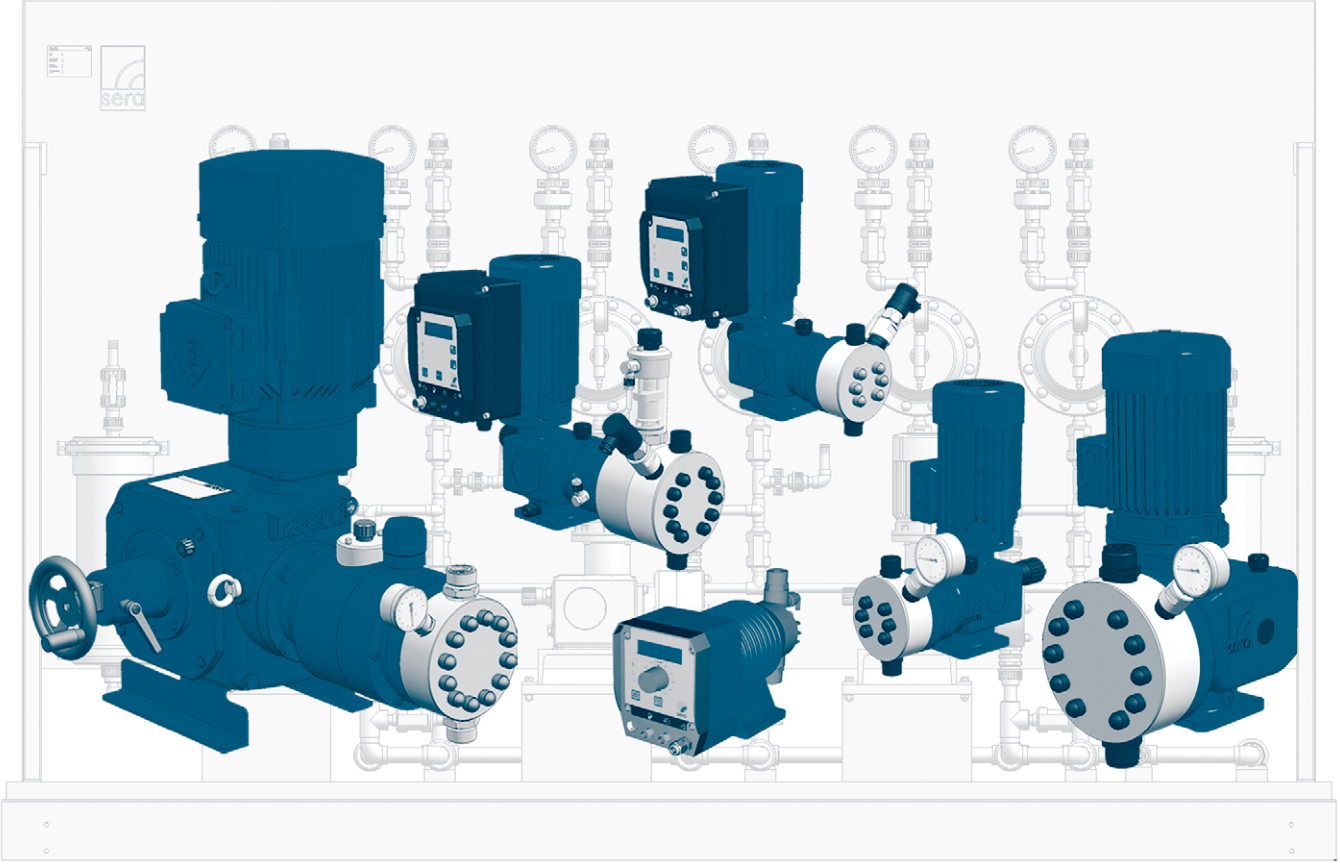

Dosing- and feeding pumps	Chapter content	Flow capacity	Counter-pressure	Page
Application in laboratory and industry	Controllable solenoid diaphragm pumps	0,4 l/h ▼ 35 l/h	10 bar ▲ 1,5 bar	2.3
	Controllable diaphragm pumps	0,8 l/h ▼ 1450 l/h	10 bar ▲ 2 bar	
	Controllable multi-layer diaphragm pumps	11 l/h ▼ 1200 l/h	20 bar ▲ 3 bar	
	Controllable piston diaphragm pumps	7,5 l/h ▼ 190 l/h	80 bar ▲ 8 bar	
Heavy industrial operating conditions, Ex-zone	Diaphragm pumps	0,4 l/h ▼ 1450 l/h	10 bar ▲ 3 bar	2.59
	Multi-layer diaphragm pumps	11 l/h ▼ 1200 l/h	20 bar ▲ 4 bar	
	Diaphragm-feeding pumps	2200 l/h ▼ 3100 l/h	4 bar	
	Piston diaphragm pumps	4,9 l/h ▼ 1740 l/h	220 bar ▲ 8 bar	
	Air driven diaphragm pumps	5,0 l/min. ▼ 850 l/min.	7,0 bar ▲ 0,5 bar	

© 2015 **sera GmbH**
Subject to technical modifications.

© 2015 **sera GmbH**
Subject to technical modifications.

Dosing- and feeding pumps for applications in laboratory and industry		Series	Flow capacity	Counter pressure	Page
	Controllable Solenoid diaphragm pumps	R 204.1	0,4 l/h ▼ 35 l/h	10 bar ▲ 1,5 bar	2.4
	Multifunctional controllable Solenoid diaphragm pumps	C 204.1	0,4 l/h ▼ 35 l/h	10 bar ▲ 1,5 bar	2.10
	Multifunctional controllable Diaphragm pumps	C 409.2	0,8 l/h ▼ 350 l/h	10 bar 3 bar	2.18
	Multifunctional controllable Diaphragm pumps	C 410.2	260 l/h ▼ 1450 l/h	8 bar ▲ 2 bar	2.34
	Multifunctional controllable multi-layer diaphragm pumps	C 409.2 - ML C 410.2 - ML	11 l/h ▼ 1200 l/h	20 bar ▲ 5 bar	2.40
	Multifunctional controllable piston diaphragm pumps	C 409.2 - KM	7,5 l/h ▼ 190 l/h	80 bar ▲ 8 bar	2.52

© 2015 **sera GmbH**
Subject to technical modifications.

R204.1 in survey

- Compact design
- Low weight
- Safe to run dry
- Leakage-free
- Low-maintenance
- User-friendly
- High dosing accuracy
- Integrable into automatic processes
- Manual stroke length and stroke frequency adjustment
- Robust, corrosion-resistant housing

Infobox

Order information	Page 2.6
Options/accessories	Page 2.6
Fittings-allocation	Page 2.9
Connecting pieces	Chapter 4
Resistance chart	Chapter 5
Installation examples	Chapter 5

2

Functions and operating modes

- Manual operation
- Manual stroke frequency adjustment (10%, 25%, 50%, 100%)
- Extern STOP
- Pulse operation (1:1)
- Analogue operation (4 - 20 mA)
- 3 LEDs for status indication
- 2-key operation
- 2 digital inputs (PLC or. contact signal)
- 1 analogue input (4 - 20 mA)
- 2-stage level monitoring
- Voltage 50/60 Hz, 100-240 V
- 2m connecting cable with Euro-plug

Technical data

Type	Nominal capacity 50/60 Hz		Nominal stroke frequency 50/60 Hz	Capacity per stroke	Admiss. counterpressure	
	l/h	gal/h	1/min	ml/stroke	bar	psi
R204.1-0,4e	0 - 0,4	0 - 0,11	150	0,04	10	145
R204.1-1,2e	0 - 1,2	0 - 0,32	150	0,13	10	145
R204.1-2,4e	0 - 2,4	0 - 0,63	150	0,27	10	145
R204.1-7,0e	0 - 7	0 - 1,85	150	0,78	10	145
R204.1-10e	0 - 10	0 - 2,64	150	1,11	6	87
R204.1-14e	0 - 14	0 - 3,70	150	1,56	3	43,5
R204.1-25e	0 - 25	0 - 6,60	150	2,78	3	43,5
R204.1-30e	0 - 30	0 - 7,93	150	3,33	2,5	36,3
R204.1-35e	0 - 35	0 - 9,25	150	3,89	1,5	21,8

Type	Admiss. pressure at pump inlet		Max. suction height	Inlet/outlet nominal width	Max. stroke length		Motor output
	bar	psi	mWC	DN	mm	in	W
R204.1-0,4e	-0,2 / 0	-2,9 / 0	2	4	1,5	0,06	20
R204.1-1,2e	-0,3 / 0	-4,3 / 0	3	5	1,5	0,06	20
R204.1-2,4e	-0,3 / 0	-4,3 / 0	3	5	1,5	0,06	26
R204.1-7,0e	-0,3 / 0	-4,3 / 0	3	5	1,5	0,06	33
R204.1-10e	-0,3 / 0	-4,3 / 0	3	5	1,5	0,06	33
R204.1-14e	-0,3 / 0	-4,3 / 0	3	5	1,5	0,06	26
R204.1-25e	-0,3 / 0	-4,3 / 0	3	10	1,5	0,06	33
R204.1-30e	-0,3 / 0	-4,3 / 0	3	10	1,5	0,06	33
R204.1-35e	-0,3 / 0	-4,3 / 0	3	10	1,5	0,06	33

© 2015 **sera GmbH**
Subject to technical modifications.

Dimensional drawing

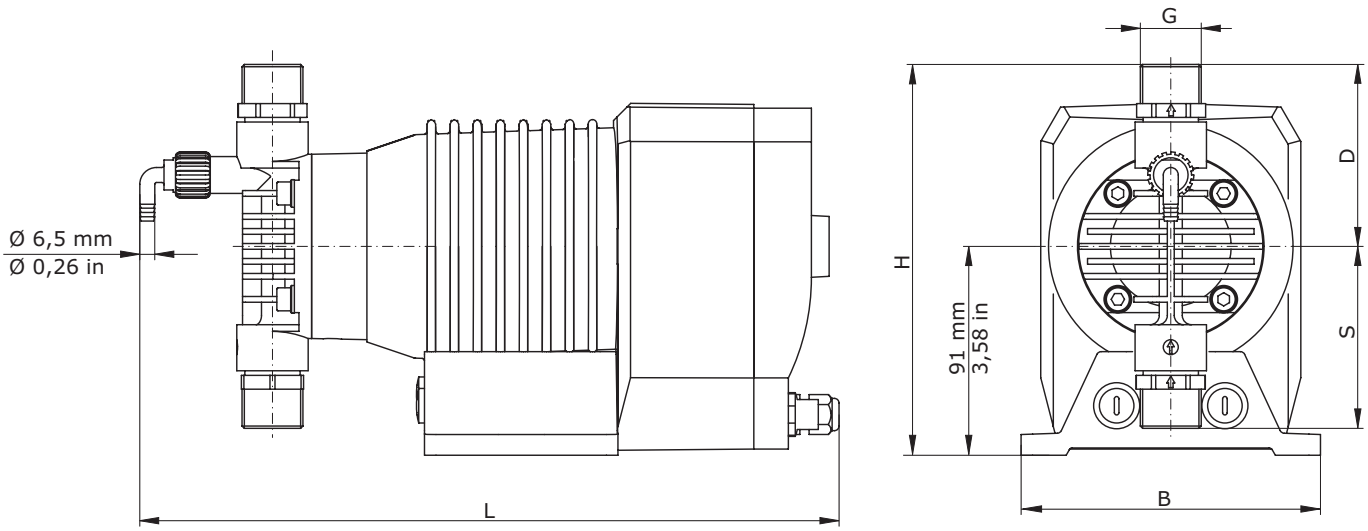

Dimensional chart

Indications in mm / inch

Type	G	S		D	
		mm	in	mm	in
R204.1-0,4e	G 3/4	65	2,56	65	2,56
R204.1-1,2e	G 3/4	80	3,15	80	3,15
R204.1-2,4e	G 3/4	80	3,15	80	3,15
R204.1-7,0e	G 3/4	80	3,15	80	3,15
R204.1-10e	G 3/4	80	3,15	80	3,15
R204.1-14e	G 3/4	80	3,15	80	3,15
R204.1-25e	G 3/4	75	2,95	75	2,95
R204.1-30e	G 3/4	75	2,95	75	2,95
R204.1-35e	G 3/4	75	2,95	75	2,95

Type	L		B		H		Weight
	mm	in	mm	in	mm	in	kg
R204.1-0,4e	275	10,83	130	5,12	156	6,14	2,7
R204.1-1,2e	305	12,01	130	5,12	171	6,73	2,7
R204.1-2,4e	305	12,01	130	5,12	171	6,73	3,4
R204.1-7,0e	305	12,01	130	5,12	171	6,73	4,4
R204.1-10e	305	12,01	130	5,12	171	6,73	4,4
R204.1-14e	305	12,01	130	5,12	171	6,73	3,4
R204.1-25e	265	10,43	130	5,12	166	6,54	4,7
R204.1-30e	265	10,43	130	5,12	166	6,54	4,7
R204.1-35e	265	10,43	130	5,12	166	6,54	4,7

- Manual vent valve only with PP-FRP and PVDF-FRP design at pumps with a nominal capacity 1,2 l/h up to 14 l/h
- Indication of weight for basic design acc. to order information

© 2015 **sera GmbH**
Subject to technical modifications.

Order information

Basic design

R204.1-0,4e
- Pump body PP
- Double valves PP
- Valve balls Al_2O_3
- Valve seals FPM
- Working diaphragm PTFE

R204.1-1,2e to R204.1-14e
- Pump body PP-FRP
- Double valves PP-FRP
- Valve balls PTFE
- Valve seals FPM
- working diaphragm PTFE-faced
- Manual vent valve PP-FRP with hose nozzle (only with pump body made of PP-FRP/ PVDF-FRP)

R204.1-25e to R204.1-35e
- Pump body PP-FRP
- Double valves PP-FRP
- Valve balls PTFE
- Valve seals FPM
- Working diaphragm PTFE-faced

Further options and accessories
- Connection pieces see chapter 4
- Product documentation see chapter 5

Type	Basic design		×
		Art.-no.	
R204.1-0,4e		15003058	
R204.1-1,2e		16007649	
R204.1-2,4e		16008838	
R204.1-7,0e		16008006	
R204.1-10e		16007816	
R204.1-14e		16008749	
R204.1-25e		16007516	
R204.1-30e		16007520	
R204.1-35e		16015365	

Options/Accessories			R204.1-0,4e	×	R204.1-1,2e up to R204.1-14e	×	R204.1-25e up to R204.1-35e	×
Pump body and valves 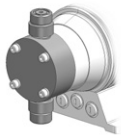	PP	double valves PP	●		–		–	
	PP-FRP	double valves PP-FRP	–		●		●	
	PVC-U	single valves PVC-U	–		–		▲	
		chamber valves (double valves) PVC-U	–		▲		–	
		double valves PVC-U	▲		–		–	
	PVDF	double valves PVDF	✆		–		–	
	PVDF-FRP	double valves PVDF-FRP	–		▲		✆	
	1.4571	double valves 1.4571/1.4581	–		–		✆	
		chamber valves (double valves) 1.4571	–		✆		–	
Valve balls 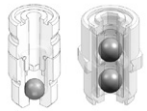	PTFE	single valves	–		–		❍	
		double valves	–		●		●	
	1.4401	single valves	–		–		❍	
		double valves	–		❍		❍	
	Al_2O_3	double valves	●		–		–	
Valve sealings	FPM	single valves	–		–		❍	
		double valves	●		●		●	
	EPDM	single valves	–		–		❍	
		double valves	❍		❍		❍	
	FEP-covered	single valves	–		–		▲	
		double valves	▲		▲		▲	
Automatic self ventilating 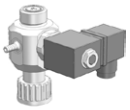	Controllable vent valve mounted on pump pressure joint Valve body: PP / Valve ball: PTFE / Sealings: EPDM Voltage 190-240 V, 50/60 Hz		▲		▲		▲	

● = Basis design – = not available ▲ = with add. price ✆ = on request ❍ = without add. price Art.-No. = available in basic design/ accessories

© 2015 sera GmbH
Subject to technical modifications.

Order information

Basic design

R204.1-0,4e
- Pump body PP
- Double valves PP
- Valve balls Al_2O_3
- Valve seals FPM
- Working diaphragm PTFE

R204.1-1,2e to R204.1-14e
- Pump body PP-FRP
- Double valves PP-FRP
- Valve balls PTFE
- Valve seals FPM
- working diaphragm PTFE-faced
- Manual vent valve PP-FRP with hose nozzle (only with pump body made of PP-FRP/PVDF-FRP)

R204.1-25e to R204.1-35e
- Pump body PP-FRP
- Double valves PP-FRP
- Valve balls PTFE
- Valve seals FPM
- Working diaphragm PTFE-faced

Further options and accessories
- Connection pieces see chapter 4
- Product documentation see chapter 5

Type	Basic design		×
		Art.-no.	
R204.1-0,4e		15003058	
R204.1-1,2e		16007649	
R204.1-2,4e		16008838	
R204.1-7,0e		16008006	
R204.1-10e		16007816	
R204.1-14e		16008749	
R204.1-25e		16007516	
R204.1-30e		16007520	
R204.1-35e		16015365	

2

Options/Accessories			R204.1-0,4e	×	R204.1-1,2e up to R204.1-14e	×	R204.1-25e up to R204.1-35e	×
Control electronics	In design cTÜVus, Connection voltage 100V - 120V +/-5%, 60Hz, 2m cable with US-/ CDN-plug		▲		▲		▲	
	In combination with the option automatic self ventilating		▲		▲		▲	
Control cable	M12 cable box 3-pole, 5 meter für level input (Level monitor not included)		90031245		90031245		90031245	
	M12 cable box 3-pole, ready-made for level input (Level monitor not included)		90022877		90022877		90022877	
	M12 cable box 5-pole, 5 meter for impulse and analogue signal		90031246		90031246		90031246	
Special connection	Special connection (plug) für power supply		✆		✆		✆	
	In combination with cTÜVus		–		–		–	
Console	for wall mounting incl. fixing screws	1.4301	90023872		90023872		90023872	
		PP	90023844		90023844		90023844	

● = Basis design – = not available ▲ = with add. price ✆ = on request ❍ = without add. price Art.-No. = available in basic design/ accessories

© 2015 **sera GmbH**
Subject to technical modifications.

Order information

R204.1-0,4e
- Pump body PP
- Double valves PP
- Valve balls Al_2O_3
- Valve seals FPM
- Working diaphragm PTFE

R204.1-1,2e to R204.1-14e
- Pump body PP-FRP
- Double valves PP-FRP
- Valve balls PTFE
- Valve seals FPM
- working diaphragm PTFE-faced
- Manual vent valve PP-FRP with hose nozzle (only with pump body made of PP-FRP/ PVDF-FRP)

R204.1-25e to R204.1-35e
- Pump body PP-FRP
- Double valves PP-FRP
- Valve balls PTFE
- Valve seals FPM
- Working diaphragm PTFE-faced

Further options and accessories
- Connection pieces see chapter 4
- Product documentation see chapter 5

Type	Basic design		×
		Art.-no.	
R204.1-0,4e		15003058	
R204.1-1,2e		16007649	
R204.1-2,4e		16008838	
R204.1-7,0e		16008006	
R204.1-10e		16007816	
R204.1-14e		16008749	
R204.1-25e		16007516	
R204.1-30e		16007520	
R204.1-35e		16015365	

2

Optionen/Zubehör		R204.1-0,4e ×	R204.1-1,2e bis R204.1-14e ×	R204.1-25e bis R204.1-35e ×
Dosing kit 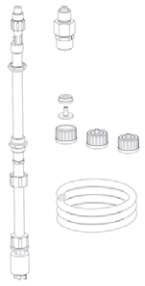	**Dosing kit - Level switch 1-stage** cons. of: 1 Pc. SL-11.1, PVC-U, PTFE-ball, 600 mm, plug M12 3 Pc. Hose screwings for PVC-U-hose 10 m. PVC-U-hose 6/12 1 Pc. Dosing valve 691.1, PP/PP-FRP, EPDM, PTFE, 1 bar	37604797	37604797	37604797
	Option: SL-11.1 - 1000 mm	▲	▲	▲
	Option: Dosing valve 691.1, PVC-U, EPDM, PTFE, 1 bar	▲	▲	▲
	Dosing kit - Level switch 2-stage cons. of: 1 Pc. SL-12.1, PVC-U, PTFE-ball, 600 mm, plug M12 3 Pc. Hose screwings for PVC-U-hose 10 m. PVC-U-hose 6/12 1 Pc. Dosing valve 691.1, PP/PP-FRP, EPDM, PTFE, 1 bar	37604798	37604798	37604798
	Option: SL-12.1 - 1000 mm	▲	▲	▲
	Option: Dosing valve 691.1, PVC-U, EPDM, PTFE, 1 bar	▲	▲	▲

● = Basis design – = not available ▲ = with add. price ✆ = on request ❍ = without add. price Art.-No. = available in basic design/ accessories

© 2015 **sera GmbH**
Subject to technical modifications.

Fittings for suction side of dosing pumps		R204.1-0,4e up to R204.1-2,4e		R204.1-7,0e up to R204.1-14e		R204.1-25e up to R204.1-35e	
		Type	p.	Type	p.	Type	p.
Pulsation damper without separating diaphragm	**PVC-U / PP / 1.4571**	✆		✆		✆	
Suction lance	**with level switch 1-stage**	SL-11.1	3.28	SL-11.1	3.28	SL-11.1	3.28
	with level switch 2-stage	SL-12.1	3.28	SL-12.1	3.28	SL-12.1	3.28
	without level switch	S-01	3.34	S-01	3.34	S-01	3.34
Priming aid	**transparent PVC-U**	769.1	3.52	769.1	3.52	769.1	3.52
Suction aid / Siphon Vessel	**transparent PVC-U**	770.2	3.54	770.2	3.54	770.2	3.54
Calibration Pot	**PVC-U**	791.1	3.56	792.1	3.56	792.1	3.56
Foot valve	**PVC-U**	731	3.58	731	3.58	731	3.58
	1.4571	731	3.60	731	3.60	731	3.60
	PP-FRP / PVDF-FRP	781.1	3.64	781.1	3.64	781.1	3.64
Line strainer	**PVC-U / PP / PVDF / 1.4408**	✆		✆		✆	

Fittings for pressure side of dosing pumps		R204.1-0,4e up to R204.1-2,4e		R204.1-7,0e up to R204.1-14e		R204.1-25e up to R204.1-35e	
		Type	p.	Type	p.	Type	p.
Diaphragm-type relief valve		620.10	3.4	620.10	3.4	620.10	3.4
Diaphragm-type pressure keeping valve		620.D	3.6	620.D	3.6	620.D	3.6
Multi-function valve	**4 bar opening pressure**	MFV 05004	3.8	MFV 05004	3.8	MFV 05004	3.8
	6 bar opening pressure	MFV 05006	3.8	MFV 05006	3.8	MFV 05006	3.8
	10 bar opening pressure	MFV 05010	3.8	MFV 05010	3.8	MFV 05010	3.8
Pulsation damper without separating diaphragm	**PVC-U / PP / 1.4571**	✆		✆		✆	
Diaphragm-pulsation damper with PTFE/PTFE-faced diaphragm	**PVC-U / PP / PVDF**	720.1	3.16	720.1	3.16	720.1	3.16
	1.4571	721.1	3.20	721.1	3.20	721.1	3.20
Diaphragm-pulsation damper with Elastomer-diaphragm	**1.4571**	810.1-0,16/10	3.22	810.1-0,16/10	3.22	810.1-0,16/10	3.22
Check valve	**PVC-U / PP-FRP / PVDF-FRP**	✆		✆		✆	
	1.4571	✆		✆		✆	
Dosing valve	**PP-FRP / PVDF-FRP**	691.1	3.40	691.1	3.40	691.1	3.40
	1.4571	691.1	3.40	691.1	3.40	691.1	3.40
	PVC-U / PP / PVDF	681.1	3.44	681.1	3.44	681.1	3.44
Injection fitting	**PVC-U / PP / PVDF**	8061.1	3.46	8061.1	3.46	8061.1	3.46

The above allocation considers the fittings which have to be used at least regarding their nominal width in order to ensure the safe and trouble-free operation of the respective pumps when feeding liquids which are resembling to water.
Absolutely note the max. admissible operating pressure of the fittings.
The use of fittings of a bigger nominal width is unproblematically possible in most cases.
When choosing the fittings note the installation instructions for dosing pumps or confer with **sera.**

© 2015 **sera GmbH**
Subject to technical modifications.

C 204.1 in survey

- Compact design
- Low weight
- Safe to run dry
- Leakage-free
- Low-maintenance
- User-friendly
- High dosing accuracy
- Multifunctional
- PROFIBUS DP-interface
- Digital and analog control possibilities

Infobox

Order information Page 2.12
Options/accessories Page 2.12
Fittings-allocation Page 2.16
Connecting pieces Chapter 4
Resistance chart Chapter 5
Installation examples Chapter 5

2

Functions and operating modes

- Manual operation
- Manual stroke frequency adjustment
- PROFIBUS DP-VO Slave Interface
- External START/STOP
- Pulse operation / fractinator
- Cycle delay unit
- Pulse fractionator
- Analogue operation (4-20 mA)*
- Analogue operation standardization
- Charge manual/with timer*
- 3 LED's for status indicator
- Multiline illuminated text display
- Menu - driven parameterization
- Flow indication
- Calibration
- 4 - key operation
- 2 digital outputs (SPS)*
- 1 digital input (SPS or contact signal)*
- 2 analogue / digital inputs (optionally reversible)*
- Programmable input-/output functions*
- Connection / evaluation 2-stage level monitoring
- Diaphragm monitoring
- Connection / evaluation flow monitoring
- Connection / evaluation flow metering
- Voltage 100 - 240 V, 50/60 Hz
- 2m Connecting cable with Euro-plug

- * inapplicable when supplied with PROFIBUS DP - interface

Technical data

Type	Nominal capacity 50/60 Hz		Nominal stroke frequency 50/60 Hz	Capacity per stroke	Admiss. counterpressure	
	l/h	gal/h	1/min	ml/Stroke	bar	psi
C204.1-0,4e	0 - 0,4	0 - 0,11	150	0,04	10	145
C204.1-1,2e	0 - 1,2	0 - 0,32	150	0,13	10	145
C204.1-2,4e	0 - 2,4	0 - 0,63	150	0,22	10	145
C204.1-7,0e	0 - 7	0 - 1,85	150	0,77	10	145
C204.1-10e	0 - 10	0 - 2,64	150	1,1	6	87
C204.1-14e	0 - 14	0 - 3,70	150	1,5	3	43,5
C204.1-25e	0 - 25	0 - 6,60	150	2,7	3	43,5
C204.1-30e	0 - 30	0 - 7,93	150	3,3	2,5	36,3
C204.1-35e	0 - 35	0 - 9,25	150	3,8	1,5	21,8

Type	Admiss. pressure at pump inlet		Max. suction height	Inlet/ Outlet nominal width	Max. stroke length		Motor output
	bar	psi	mWS	DN	mm	in	W
C204.1-0,4e	-0,2 / 0	-2,9 / 0	2	4	1,5	0,06	20
C204.1-1,2e	-0,3 / 0	-4,3 / 0	3	5	1,5	0,06	20
C204.1-2,4e	-0,3 / 0	-4,3 / 0	3	5	1,5	0,06	26
C204.1-7,0e	-0,3 / 0	-4,3 / 0	3	5	1,5	0,06	33
C204.1-10e	-0,3 / 0	-4,3 / 0	3	5	1,5	0,06	33
C204.1-14e	-0,3 / 0	-4,3 / 0	3	5	1,5	0,06	26
C204.1-25e	-0,3 / 0	-4,3 / 0	3	10	1,5	0,06	33
C204.1-30e	-0,3 / 0	-4,3 / 0	3	10	1,5	0,06	33
C204.1-35e	-0,3 / 0	-4,3 / 0	3	10	1,5	0,06	33

© 2015 sera GmbH
Subject to technical modifications.

Dimensional drawing

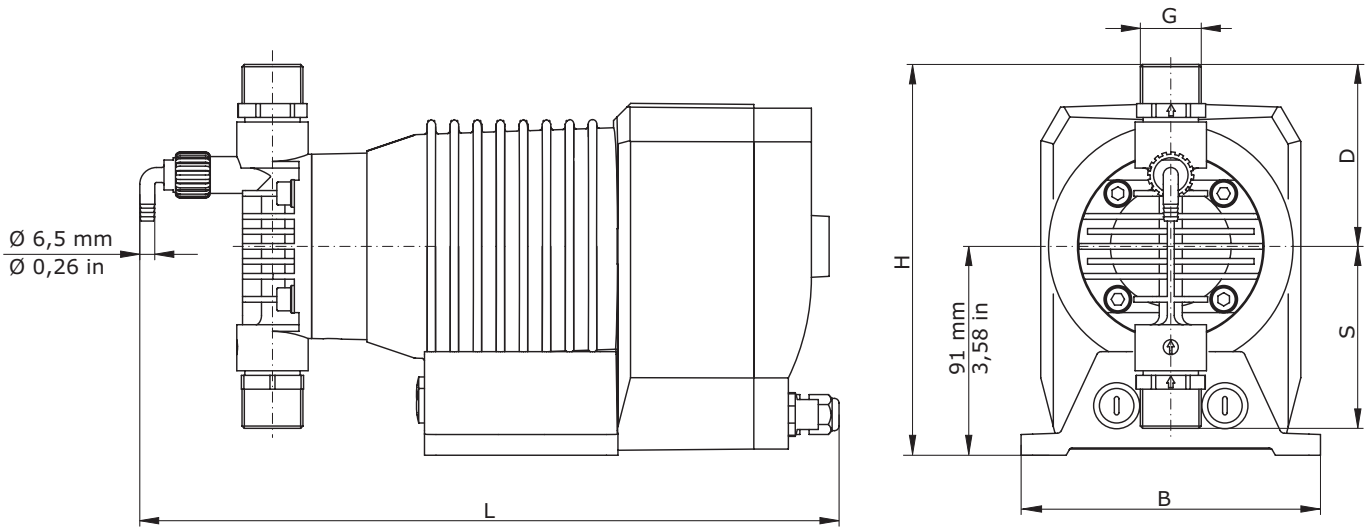

Dimensional chart

Indications in mm / inch

Type	G	S		D	
		mm	in	mm	in
C204.1-0,4e	G 3/4	65	2,56	65	2,56
C204.1-1,2e	G 3/4	80	3,15	80	3,15
C204.1-2,4e	G 3/4	80	3,15	80	3,15
C204.1-7,0e	G 3/4	80	3,15	80	3,15
C204.1-10e	G 3/4	80	3,15	80	3,15
C204.1-14e	G 3/4	80	3,15	80	3,15
C204.1-25e	G 3/4	75	2,95	75	2,95
C204.1-30e	G 3/4	75	2,95	75	2,95
C204.1-35e	G 3/4	75	2,95	75	2,95

Type	L		B		H		Weight
	mm	in	mm	in	mm	in	kg
C204.1-0,4e	272	10,71	130	5,12	156	6,14	2,7
C204.1-1,2e	305	12,01	130	5,12	171	6,73	2,7
C204.1-2,4e	305	12,01	130	5,12	171	6,73	3,4
C204.1-7,0e	305	12,01	130	5,12	171	6,73	4,4
C204.1-10e	305	12,01	130	5,12	171	6,73	4,4
C204.1-14e	305	12,01	130	5,12	171	6,73	3,4
C204.1-25e	265	10,43	130	5,12	166	6,54	4,7
C204.1-30e	265	10,43	130	5,12	166	6,54	4,7
C204.1-35e	265	10,43	130	5,12	166	6,54	4,7

- Manual vent valve only with PP-FRP and PVDF-FRP design at pumps with a nominal capacity 1,2 l/h up to 14 l/h
- Indication of weight for basic design acc. to order information

© 2015 **sera GmbH**
Subject to technical modifications.

Order information

Basic design

C204.1-0,4
- Pump body PP
- Double valves PP
- Valve balls Al_2O_3
- Valve seals FPM
- Working diaphragm PTFE
- Diaphragm monitoring
- 5m control cable 8-pole

C204.1-1,2e up to C204.1-14
- Pump body PP-FRP
- Double valves PP-FRP
- Valve balls PTFE
- Valve seals FPM
- Working diaphragm PTFE-faced
- Diaphragm monitoring
- Manual vent valve PP-FRP with hose nozzle (only with pump body made of PP-FRP/PVDF-FRP)
- 5m Control cable 8-pole

C204.1-25e up to C204.1-35e
- Pump body PP-FRP
- Double valves PP-FRP
- Valve balls PTFE
- Valve seals FPM
- Working diaphragm PTFE-faced
- Diaphragm monitoring
- 5m Control cable 8-pole

Further options and accessories
- Connection pieces see chapter 4
- Product documentation see chapter 5

Type	Basic design		×
		Art.-no.	
C204.1-0,4e		16018314	
C204.1-1,2e		16019066	
C204.1-2,4e		16010191	
C204.1-7,0e		16009166	
C204.1-10e		16012364	
C204.1-14e		16012538	
C204.1-25e		16019268	
C204.1-30e		16021656	
C204.1-35e		16020675	

Options/Accessories			C204.1-0,4e	×	C204.1-1,2e C204.1-2,4e	×	C204.1-7,0e up to C204.1-14e	×	C204.1-25e up to C204.1-35e	×
Pump body and valves 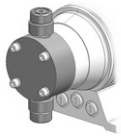	PP	double valves PP	●		–		–		–	
	PP-FRP	double valves PP-FRP	–		●		●		●	
	PVC-U	single valves PVC-U	–		–		–		▲	
		chamber valves (double valves) PVC-U	–		▲		▲		–	
		double valves PVC-U	▲		–		–		–	
	PVDF	double valves PVDF	✆		–		–		–	
	PVDF-FRP	double valves PVDF-FRP	–		▲		▲		✆	
	1.4571	double valves 1.4571/1.4581	–		–		–		✆	
		chamber valves (double valves) 1.4571	–		✆		✆		–	
Valve balls 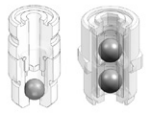	PTFE	single valves	–		–		–		❍	
		double valves	–		●		●		●	
	1.4401	single valves	–		–		–		❍	
		double valves	–		❍		❍		❍	
	Al_2O_3	double valves	●		–		–		–	
Valve sealings	FPM	single valves	–		–		–		❍	
		double valves	●		●		●		●	
	EPDM	single valves	–		–		–		❍	
		double valves	❍		❍		❍		❍	
	FEP-covered	single valves	–		–		–		▲	
		double valves	▲		▲		▲		▲	
	■ The option FEP-covered valve sealings is in combination with the pump body design made of PP-FRP or PVDF-FRP only available on request.									
Automatic self ventilating 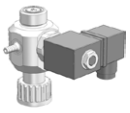	Controllable vent valve mounted on pump pressure joint Valve body: PP / Valve ball: PTFE / Sealings: EPDM Voltage 190-240 V, 50/60 Hz		▲		▲		▲		▲	

● = Basis design – = not available ▲ = with add. price ✆ = on request ❍ = without add. price Art.-No. = available in basic design/ accessories

© 2015 sera GmbH
Subject to technical modifications.

Order information

Basic design

C204.1-0,4
- Pump body PP
- Double valves PP
- Valve balls Al_2O_3
- Valve seals FPM
- Working diaphragm PTFE
- Diaphragm monitoring
- 5m control cable 8-pole

C204.1-1,2e up to C204.1-14
- Pump body PP-FRP
- Double valves PP-FRP
- Valve balls PTFE
- Valve seals FPM
- Working diaphragm PTFE-faced
- Diaphragm monitoring
- Manual vent valve PP-FRP with hose nozzle (only with pump body made of PP-FRP/PVDF-FRP)
- 5m Control cable 8-pole

C204.1-25e up to C204.1-35e
- Pump body PP-FRP
- Double valves PP-FRP
- Valve balls PTFE
- Valve seals FPM
- Working diaphragm PTFE-faced
- Diaphragm monitoring
- 5m Control cable 8-pole

Further options and accessories
- Connection pieces see chapter 4
- Product documentation see chapter 5

Type	Basic design		×
		Art.-no.	
C204.1-0,4e		16018314	
C204.1-1,2e		16019066	
C204.1-2,4e		16010191	
C204.1-7,0e		16009166	
C204.1-10e		16012364	
C204.1-14e		16012538	
C204.1-25e		16019268	
C204.1-30e		16021656	
C204.1-35e		16020675	

2

Options/Accessories			C204.1-0,4e	×	C204.1-1,2e C204.1-2,4e	×	C204.1-7,0e up to C204.1-14e	×	C204.1-25e up to C204.1-35e	×
Control electronics	In design cTÜVus, Connection voltage 100V - 120V +/-5%, 60Hz, 2m cable with US-/ CDN-plug		▲		▲		▲		▲	
	In combination with the option automatic self ventilating		▲		▲		▲		▲	
Profibus	Profibus-interface: **Profibus DP-V0 (slave)** Bit rate: **Automatic 9,6 kbit/s – 12 Mbit/s** Connection to dosing pump: **M12-cable box, 5-pole, B-coded**		▲		▲		▲		▲	
	Profibus Y-distributor M12x1, 5-pole, IP67		90025526		90025526		90025526		90025526	
	Profibus T-distributor M12x1, 5-pole, IP67		90022889		90022889		90022889		90022889	
	Profibus terminating resistor M12x1, 5-pole, IP67		90022890		90022890		90022890		90022890	
	In combination with cTÜVus		–		–		–		–	
Flow controller	IP65 incl. cable 0,6 m and cable box M12 - 5-pole (bushing for pump connection) Material valve seals: FPM Connection: Input: G 3/4 (Inlet), output: G 3/4 (outlet) Max. permissible operating pressure: 10 bar									
	8191.1	PVC-U/FPM	–		–		37602227		–	
		PP/FPM	–		–		37602175		–	
	8192.1	PVC-U/FPM	–		–		–		37602176	
		PP/FPM	–		–		–		37602177	

- Compare application of the flow controller with the adjusted displacement, possibly use type 8191.1. (Observe information in the data sheet)

● = Basis design – = not available ▲ = with add. price ✆ = on request ❍ = without add. price Art.-No. = available in basic design/ accessories

© 2015 **sera GmbH**
Subject to technical modifications.

Order information

Basic design

C204.1-0,4
- Pump body PP
- Double valves PP
- Valve balls Al_2O_3
- Valve seals FPM
- Working diaphragm PTFE
- Diaphragm monitoring
- 5m control cable 8-pole

C204.1-1,2e up to C204.1-14
- Pump body PP-FRP
- Double valves PP-FRP
- Valve balls PTFE
- Valve seals FPM
- Working diaphragm PTFE-faced
- Diaphragm monitoring
- Manual vent valve PP-FRP with hose nozzle (only with pump body made of PP-FRP/PVDF-FRP)
- 5m Control cable 8-pole

C204.1-25e up to C204.1-35e
- Pump body PP-FRP
- Double valves PP-FRP
- Valve balls PTFE
- Valve seals FPM
- Working diaphragm PTFE-faced
- Diaphragm monitoring
- 5m Control cable 8-pole

Further options and accessories
- Connection pieces see chapter 4
- Product documentation see chapter 5

Type	Basic design		×
		Art.-no.	
C204.1-0,4e		16018314	
C204.1-1,2e		16019066	
C204.1-2,4e		16010191	
C204.1-7,0e		16009166	
C204.1-10e		16012364	
C204.1-14e		16012538	
C204.1-25e		16019268	
C204.1-30e		16021656	
C204.1-35e		16020675	

Options/Accessories			C204.1-0,4e ×	C204.1-1,2e C204.1-2,4e ×	C204.1-7,0e up to C204.1-14e ×	C204.1-25e up to C204.1-35e ×
Flow meter 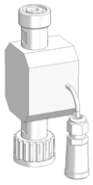	IP65 incl. cable 0,6m and cable box M12 5-pole (bushing for pump connection) Connection: Inlet: G 3/4 (inside); Outlet G 3/4 (outside) Max. operating pressure: 8 bar					
	8010.1	ECTFE/PP/FPM	–	–	37602337	–
		ECTFE/PVC-U/FPM	–	–	37602339	–
		ECTFE/PVDF/FPM	–	–	37602341	–
	8011.1	ECTFE/PP/FPM	–	–	–	37602343
		ECTFE/PVC-U/FPM	–	–	–	37602345
		ECTFE/PVDF/FPM	–	–	–	37602348
Control cable	M12 cable box 3-pole, 5 meter für level input (Level monitor not included)		90031245	90031245	90031245	90031245
	M12 cable box 3-pole, ready-made for level input (Level monitor not included)		90022877	90022877	90022877	90022877
Special connection	Special connection (plug) für power supply		✆	✆	✆	✆
	In combination with cTÜVus		–	–	–	–
Console 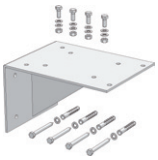	for wall mounting incl. fixing screws	1.4301	90023872	90023872	90023872	90023872
		PP	90023844	90023844	90023844	90023844

● = Basis design – = not available ▲ = with add. price ✆ = on request ❍ = without add. price Art.-No. = available in basic design/ accessories

© 2015 **sera GmbH**
Subject to technical modifications.

Order information

Basic design

C204.1-0,4
- Pump body PP
- Double valves PP
- Valve balls Al_2O_3
- Valve seals FPM
- Working diaphragm PTFE
- Diaphragm monitoring
- 5m control cable 8-pole

C204.1-1,2e up to C204.1-14
- Pump body PP-FRP
- Double valves PP-FRP
- Valve balls PTFE
- Valve seals FPM
- Working diaphragm PTFE-faced
- Diaphragm monitoring
- Manual vent valve PP-FRP with hose nozzle (only with pump body made of PP-FRP/PVDF-FRP)
- 5m Control cable 8-pole

C204.1-25e up to C204.1-35e
- Pump body PP-FRP
- Double valves PP-FRP
- Valve balls PTFE
- Valve seals FPM
- Working diaphragm PTFE-faced
- Diaphragm monitoring
- 5m Control cable 8-pole

Further options and accessories
- Connection pieces see chapter 4
- Product documentation see chapter 5

Type	Basic design		×
		Art.-no.	
C204.1-0,4e		16018314	
C204.1-1,2e		16019066	
C204.1-2,4e		16010191	
C204.1-7,0e		16009166	
C204.1-10e		16012364	
C204.1-14e		16012538	
C204.1-25e		16019268	
C204.1-30e		16021656	
C204.1-35e		16020675	

2

Options/Accessories		C204.1-0,4e	×	C204.1-1,2e C204.1-2,4e	×	C204.1-7,0e up to C204.1-14e	×	C204.1-25e up to C204.1-35e	×
Dosing kit 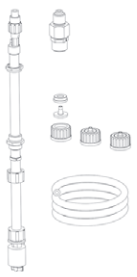	**Dosing kit - Level switch 1-stage** cons. of: 1 Pc. SL-11.1, PVC-U, PTFE-ball, 600 mm, plug M12 3 Pc. Hose screwings for PVC-U-hose 10 m. PVC-U-hose 6/12 1 Pc. Dosing valve 691.1, PP/PP-FRP, EPDM, PTFE, 1 bar	37604797		37604797		37604797		37604797	
	Option: SL-11.1 - 1000 mm	▲		▲		▲		▲	
	Option: Dosing valve 691.1, PVC-U, EPDM, PTFE, 1 bar	▲		▲		▲		▲	
	Dosing kit - Level switch 2-stage cons. of: 1 Pc. SL-12.1, PVC-U, PTFE-ball, 600 mm, plug M12 3 Pc. Hose screwings for PVC-U-hose 10 m. PVC-U-hose 6/12 1 Pc. Dosing valve 691.1, PP/PP-FRP, EPDM, PTFE, 1 bar	37604798		37604798		37604798		37604798	
	Option: SL-12.1 - 1000 mm	▲		▲		▲		▲	
	Option: Dosing valve 691.1, PVC-U, EPDM, PTFE, 1 bar	▲		▲		▲		▲	

● = Basis design – = not available ▲ = with add. price ✆ = on request ❍ = without add. price Art.-No. = available in basic design/ accessories

© 2015 **sera GmbH**
Subject to technical modifications.

Fittings for suction side of dosing pumps		C204.1-0,4e up to C204.1-2,4e		C204.1-7,0e up to C204.1-14e		C204.1-25e up to C204.1-35e	
		Type	p.	Type	p.	Type	p.
Pulsation damper without separating diaphragm	**PVC-U / PP / 1.4571**	✆		✆		✆	
Suction lance	**with level switch 1-stage**	SL-11.1	3.28	SL-11.1	3.28	SL-11.1	3.28
	with level switch 2-stage	SL-12.1	3.28	SL-12.1	3.28	SL-12.1	3.28
	without level switch	S-01	3.34	S-01	3.34	S-01	3.34
Priming aid	**transparent PVC-U**	769.1	3.52	769.1	3.52	769.1	3.52
Suction aid / Siphon Vessel	**transparent PVC-U**	770.2	3.54	770.2	3.54	770.2	3.54
Calibration Pot	**PVC-U**	791.1	3.56	792.1	3.56	792.1	3.56
Foot valve	**PVC-U**	731	3.58	731	3.58	731	3.58
	1.4571	731	3.60	731	3.60	731	3.60
	PP-FRP / PVDF-FRP	781.1	3.64	781.1	3.64	781.1	3.64
Line strainer	**PVC-U / PP / PVDF / 1.4408**	✆		✆		✆	

Fittings for pressure side of dosing pumps		C204.1-0,4e up to C204.1-2,4e		C204.1-7,0e up to C204.1-14e		C204.1-25e up to C204.1-35e	
		Type	p.	Type	p.	Type	p.
Diaphragm-type relief valve		620.10	3.4	620.10	3.4	620.10	3.4
Diaphragm-type pressure keeping valve		620.D	3.6	620.D	3.6	620.D	3.6
Multi-function valve	**4 bar opening pressure**	MFV 05004	3.8	MFV 05004	3.8	MFV 05004	3.8
	6 bar opening pressure	MFV 05006	3.8	MFV 05006	3.8	MFV 05006	3.8
	10 bar opening pressure	MFV 05010	3.8	MFV 05010	3.8	MFV 05010	3.8
Pulsation damper without separating diaphragm	**PVC-U / PP / 1.4571**	✆		✆		✆	
Diaphragm-pulsation damper with PTFE/PTFE-faced diaphragm	**PVC-U / PP / PVDF**	720.1	3.16	720.1	3.16	720.1	3.16
	1.4571	721.1	3.20	721.1	3.20	721.1	3.20
Diaphragm-pulsation damper with Elastomer-diaphragm	**1.4571**	810.1-0,16/10	3.22	810.1-0,16/10	3.22	810.1-0,16/10	3.22
Check valve	**PVC-U / PP-FRP / PVDF-FRP**	✆		✆		✆	
	1.4571	✆		✆		✆	
Dosing valve	**PP-FRP / PVDF-FRP**	691.1	3.40	691.1	3.40	691.1	3.40
	1.4571	691.1	3.40	691.1	3.40	691.1	3.40
	PVC-U / PP / PVDF	681.1	3.44	681.1	3.44	681.1	3.44
Injection fitting	**PVC-U / PP / PVDF**	8061.1	3.46	8061.1	3.46	8061.1	3.46

The above allocation considers the fittings which have to be used at least regarding their nominal width in order to ensure the safe and trouble-free operation of the respective pumps when feeding liquids which are resembling to water.

Absolutely note the max. admissible operating pressure of the fittings.

The use of fittings of a bigger nominal width is unproblematically possible in most cases.

When choosing the fittings note the installation instructions for dosing pumps or confer with **sera.**

© 2015 **sera GmbH**
Subject to technical modifications.

© 2015 **sera GmbH**
Subject to technical modifications.

C409.2 in survey

- Safe to run dry
- Leckage free
- Low maintenance
- Easy to use
- High dosing accuracy
- Multifunctional
- PROFIBUS - DP - interface
- Flexible
- Manuel stroke length and stroke frequency adjustment
- Robust metallic housing

Infobox

Order information Page 2.20
Options/accessories Page 2.20
Fittings-allocation Page 2.24
Connecting pieces Chapter 4
Resistance chart Chapter 5
Installation examples Chapter 5

Functions and operating modes

- Manual operation
- Manual stroke frequency adjustment
- PROFIBUS DP-VO slave Interface
- External START/STOP
- Pulse operation / fractinator
- Cycle delay unit
- Analogue operation (0/4-20 mA)*
- Analogue operation standardization
- Charge manual / with timer*
- Speed control / Slow mode
- 3 LED's for status indication
- Multiline illuminated text display
- Menu - driven parameterization
- Flow indication
- Calibration
- 4 - key operation
- 2 digital outputs (PLC)*
- 1 digital input (PLC or contact signal)*
- 2 analogue / digital inputs (optionally reversible)*
- Programmable input- / output functions*
- Connection / evaluation 2-stage level monitoring
- Diaphragm monitoring
- Connection / evaluation flow monitoring
- Connection / evaluation flow metering
- Voltage 210 - 250 V, 50/60 Hz
- 2m connecting cable wih Euro-plug

- * inapplicable when supplied with PROFIBUS DP - interface

Technical data

Type	Nominal capacity 50/60 Hz		Nominal stroke frequency 50/60 Hz	Capacity per stroke	Admiss. counterpressure	
	l/h	gal/h	1/min	ml/stroke	bar	psi
C409.2-0,8e	0 - 0,8	0 - 0,21	100	0,13	10	145
C409.2-1,6e	0 - 1,6	0 - 0,42	100	0,27	10	145
C409.2-2,4e	0 - 2,4	0 - 0,63	150	0,27	10	145
C409.2-4,0e	0 - 4	0 - 1,06	100	0,67	10	145
C409.2-7,0e	0 - 7	0 - 1,85	150	0,78	10	145
C409.2-12e	0 - 12	0 - 3,17	67	3	10	145

Type	Admiss. pressure at pump inlet		Max. suction height	Inlet/ Outlet nominal width	Max. stroke length		Motor output
	bar	psi	mWC	DN	mm	in	kW
C409.2-0,8e	-0,2 / 0	-2,9 / 0	2	5	1,6	0,06	0,18
C409.2-1,6e	-0,3 / 0	-4,3 / 0	3	5	1,6	0,06	0,18
C409.2-2,4e	-0,3 / 0	-4,3 / 0	3	5	1,6	0,06	0,18
C409.2-4,0e	-0,3 / 0	-4,3 / 0	3	5	4	0,16	0,18
C409.2-7,0e	-0,3 / 0	-4,3 / 0	3	5	4	0,16	0,18
C409.2-12e	-0,3 / 0	-4,3 / 0	3	10	6	0,24	0,18

© 2015 sera GmbH
Subject to technical modifications.

Dimensional drawing

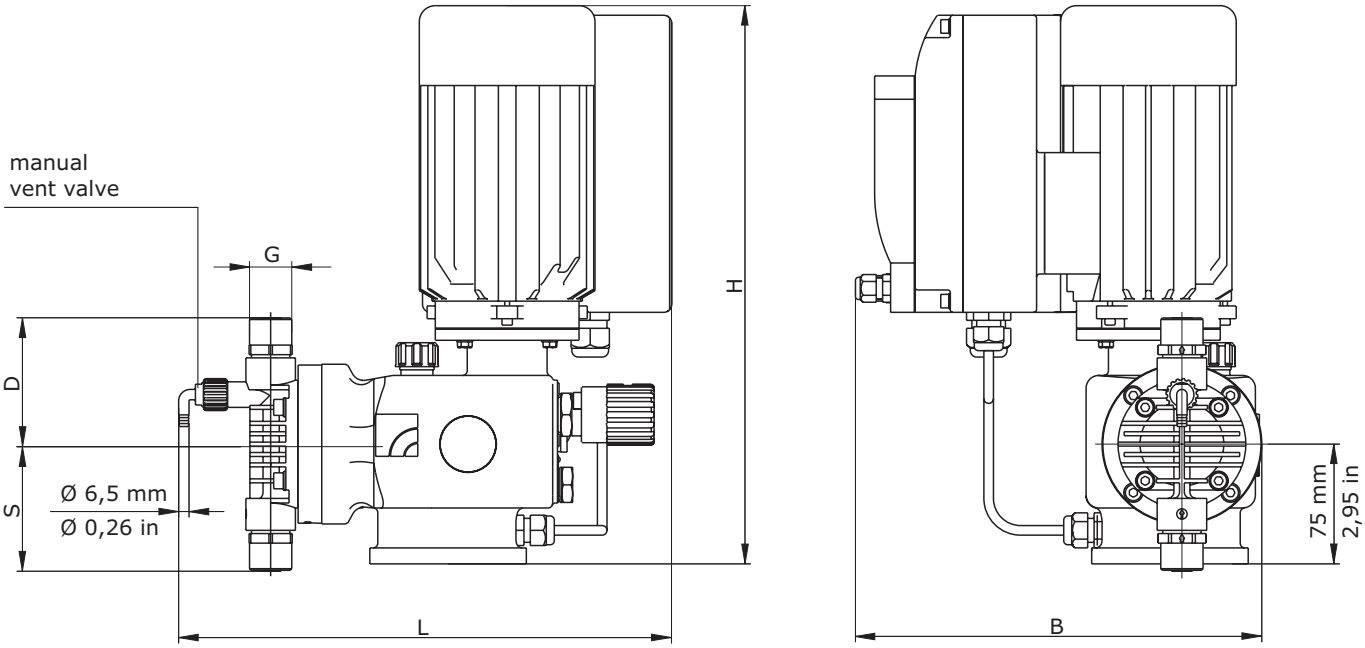

Dimensional chart

Indications in mm / inch

Type	G	S		D	
		mm	in	mm	in
C409.2-0,8e	G 3/4	80	3,15	80	3,15
C409.2-1,6e	G 3/4	80	3,15	80	3,15
C409.2-2,4e	G 3/4	80	3,15	80	3,15
C409.2-4,0e	G 3/4	56	2,2	64	2,52
C409.2-7,0e	G 3/4	56	2,2	64	2,52
C409.2-12e	G 3/4	56	2,2	64	2,52

Type	L		B		H		Weight
	mm	in	mm	in	mm	in	kg
C409.2-0,8e	310	12,2	250	9,84	380	14,96	11
C409.2-1,6e	310	12,2	250	9,84	380	14,96	11
C409.2-2,4e	310	12,2	250	9,84	380	14,96	11
C409.2-4,0e	270	10,63	250	9,84	380	14,96	11
C409.2-7,0e	270	10,63	250	9,84	380	14,96	11
C409.2-12e	250	9,84	250	9,84	380	14,96	10,7

- Manual vent valve only with PP-FRP and PVDF-FRP design at pumps with a nominal capacity 0,8 l/h up to 2,4 l/h
- Indication of weight for basic design acc. to order information

© 2015 **sera GmbH**
Subject to technical modifications.

Order information

Basic design

C409.2-0,8e up to C409.2-2,4e
- Pump body PP-FRP
- Double valves PP-FRP
- Valve balls PTFE
- Valve sealings FPM
- Working diaphragm PTFE-faced
- Diaphragm monitoring
- 5m control cable 8-pole
- Manual vent valve PP-FRP with hose nozzle (only with pump body made of PP-FRP/PVDF-FRP)

C409.2-4,0e up to C409.2-12e
- Pump body PP-FRP
- Double valves PP-FRP
- Valve balls PTFE
- Valve sealings FPM
- Working diaphragm PTFE-faced
- Diaphragm monitoring
- 5m control cable 8-pole

Motor:
- 210-250 V, 50/60 Hz, 1~, IP55, ISO F

Further options and accessories:
- Connection pieces see chapter 4
- Product documentation see chapter 5

Type	Basic design		×
		Art.-no.	
C409.2-0,8e		16014879	
C409.2-1,6e		16020665	
C409.2-2,4e		16020843	
C409.2-4,0e		16013992	
C409.2-7,0e		16013146	
C409.2-12e		16012993	

2

Options/Accessories			C409.2-0,8e up to C409.2-2,4e ×	C409.2-4,0e C409.2-7,0e ×	C409.2-12e ×
Pump body and valves	PP-FRP	double valves PP-FRP	●	●	●
	PVC-U	single valves PVC-U	–	▲	▲
		chamber valves (double valves) PVC-U	▲	–	–
	PVDF-FRP	double valves PVDF-FRP	▲	▲	▲
	1.4571	double valves 1.4571/1.4581	–	▲	▲
		chamber valves (double valves) 1.4571	▲	–	–
Valve balls 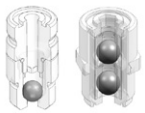	PTFE	single valves	–	❍	❍
		double valves	●	●	●
	1.4401	single valves	–	❍	❍
		double valves	❍	❍	❍
Valve sealings	FPM	single valves	–	❍	❍
		double valves	●	●	●
	EPDM	single valves	–	❍	❍
		double valves	❍	❍	❍
	FEP-covered	single valves	–	▲	▲
		double valves	▲	▲	▲
Automatic self ventilating 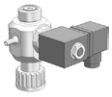	Controllable vent vallve mounted on pump pressure joint Valve body: PP / Valve ball: PTFE / Sealings: EPDM Voltage 190-240 V, 50/60 Hz		▲	▲	▲
Intergrated relief valve 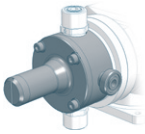	with PTFE-faced diaphragm, connection seal FPM or EPDM at pump body made of:				
	PP / PVC-U		–	▲	▲
	PVDF		–	✆	✆
	1.4571		–	▲	▲
	Connection seals FEP-covered		–	▲	▲
	■ In combination wirh the option automatic self ventilating from C409.2-12e on request				

● = Basis design – = not available ▲ = with add. price ✆ = on request ❍ = without add. price Art.-No. = available in basic design/ accessories

© 2015 **sera GmbH**
Subject to technical modifications.

Order information

Basic design

C409.2-0,8e up to C409.2-2,4e
- Pump body PP-FRP
- Double valves PP-FRP
- Valve balls PTFE
- Valve sealings FPM
- Working diaphragm PTFE-faced
- Diaphragm monitoring
- 5m control cable 8-pole
- Manual vent valve PP-FRP with hose nozzle (only with pump body made of PP-FRP/PVDF-FRP)

C409.2-4,0e up to C409.2-12e
- Pump body PP-FRP
- Double valves PP-FRP
- Valve balls PTFE
- Valve sealings FPM
- Working diaphragm PTFE-faced
- Diaphragm monitoring
- 5m control cable 8-pole

Motor:
- 210-250 V, 50/60 Hz, 1~, IP55, ISO F

Further options and accessories:
- Connection pieces see chapter 4
- Product documentation see chapter 5

Type	Basic design		×
		Art.-no.	
C409.2-0,8e		16014879	
C409.2-1,6e		16020665	
C409.2-2,4e		16020843	
C409.2-4,0e		16013992	
C409.2-7,0e		16013146	
C409.2-12e		16012993	

Options/Accessories		C409.2-0,8e up to C409.2-2,4e	×	C409.2-4,0e C409.2-7,0e	×	C409.2-12e	×
Stroke length adjustment	with position indicator	▲		▲		▲	
Control electronics	In design cTÜVus, Connection voltage 100V - 120V +/-5%, 60Hz, 2m cable with US-/ CDN-plug	▲		▲		▲	
	In combination with the option automatic self ventilating	▲		▲		▲	
Stroke length adjustment electrical 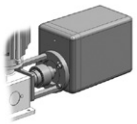	**Actuator N-AS10** 230V, +/- 10%, 50/60 Hz, 51,2s/4U, 2 Nm incl. mounting plate for actuator	▲		–		–	
	Electronic positioning controller PMR3 input signal 0/4-20 mA incl. feedback signal 0/4-20 mA (only in N-AS 10 integrated)	▲		–		–	
	Actuator N C1-BA 230 V, +/- 10%, 50/60 Hz, 128s/10 U, 1,5 Nm incl. mounting plate for actuator	–		▲		▲	
	Electronic positioning controller PMR3 input signal 0/4-20 mA incl. feedback signal 0/4-20 mA (only in N C1-BA integrated)	–		▲		▲	
	In combination with cTÜVus	✆		✆		✆	
Profibus	Profibus-interface: **Profibus DP-V0 (slave)** Bit rate: **Automatic 9,6 kbit/s – 12 Mbit/s** Connection to dosing pump: **M12-cable box, 5-pole, B-coded**	▲		▲		▲	
	Profibus Y-distributor M12x1, 5-pole, IP67	90025526		90025526		90025526	
	Profibus T-distributor M12x1, 5-pole, IP67	90022889		90022889		90022889	
	Profibus terminating resistor M12x1, 5-pole, IP67	90022890		90022890		90022890	
	In combination with cTÜVus	–		–		–	

● = Basis design – = not available ▲ = with add. price ✆ = on request ❍ = without add. price Art.-No. = available in basic design/ accessories

© 2015 **sera GmbH**
Subject to technical modifications.

Order information

Basic design

C409.2-0,8e up to C409.2-2,4e
- Pump body PP-FRP
- Double valves PP-FRP
- Valve balls PTFE
- Valve sealings FPM
- Working diaphragm PTFE-faced
- Diaphragm monitoring
- 5m control cable 8-pole
- Manual vent valve PP-FRP with hose nozzle (only with pump body made of PP-FRP/PVDF-FRP)

C409.2-4,0e up to C409.2-12e
- Pump body PP-FRP
- Double valves PP-FRP
- Valve balls PTFE
- Valve sealings FPM
- Working diaphragm PTFE-faced
- Diaphragm monitoring
- 5m control cable 8-pole

Motor:
- 210-250 V, 50/60 Hz, 1~, IP55, ISO F

Further options and accessories:
- Connection pieces see chapter 4
- Product documentation see chapter 5

Type	Basic design	
		Art.-no.
C409.2-0,8e		16014879
C409.2-1,6e		16020665
C409.2-2,4e		16020843
C409.2-4,0e		16013992
C409.2-7,0e		16013146
C409.2-12e		16012993

2

Options/Accessories			C409.2-0,8e up to C409.2-2,4e	C409.2-4,0e C409.2-7,0e	C409.2-12e
Drive motor	Connection voltage 115V / 50/60 Hz		✆	✆	✆
	In combination with cTÜVus		–	–	–
Control electronics	Remote-design, for wall mounting incl. 3m cable and fixing materials (not in combination with cTÜVus		▲	▲	▲
Flow controller	IP65 incl. cable 0,6m and cable bax M12 - 5-pole (bushing for pump connection) Material valve seals: FPM Thread connection: Input: G 3/4 (IG), output: G 3/4 max. pressure: 10 bar				
	8191.1	PVC-U/FPM	37602227	37602227	37602227
		PP/FPM	37602175	37602175	37602175
Flow meter	IP65 incl. cable 0,6m and cable box M12 5-pole (bushing for pump connection) Connection: Inlet: G 3/4 (inside); Outlet G 3/4 (outside) Max. operating pressure: 10 bar				
	8010.1	ECTFE/PP/FPM	–	37602337	–
		ECTFE/PVC-U/FPM	–	37602339	–
		ECTFE/PVDF/FPM	–	37602341	–
	8012.1	PVC-U/FPM	–	–	37602277
		PVDF/FPM	–	–	37602307
	Seals made of EPDM		–	❍	❍
Control cable	M12 cable box 3-pole, 5 meter für level input (Level monitor not included)		90031245	90031245	90031245
	M12 cable box 3-pole, ready-made for level input (Level monitor not included)		90022877	90022877	90022877

● = Basis design – = not available ▲ = with add. price ✆ = on request ❍ = without add. price Art.-No. = available in basic design/ accessories

© 2015 **sera GmbH**
Subject to technical modifications.

Order information

Basic design

C409.2-0,8e up to C409.2-2,4e
- Pump body PP-FRP
- Double valves PP-FRP
- Valve balls PTFE
- Valve sealings FPM
- Working diaphragm PTFE-faced
- Diaphragm monitoring
- 5m control cable 8-pole
- Manual vent valve PP-FRP with hose nozzle (only with pump body made of PP-FRP/PVDF-FRP)

C409.2-4,0e up to C409.2-12e
- Pump body PP-FRP
- Double valves PP-FRP
- Valve balls PTFE
- Valve sealings FPM
- Working diaphragm PTFE-faced
- Diaphragm monitoring
- 5m control cable 8-pole

Motor:
- 210-250 V, 50/60 Hz, 1~, IP55, ISO F

Further options and accessories:
- Connection pieces see chapter 4
- Product documentation see chapter 5

Type	Basic design	×
	Art.-no.	
C409.2-0,8e	16014879	
C409.2-1,6e	16020665	
C409.2-2,4e	16020843	
C409.2-4,0e	16013992	
C409.2-7,0e	16013146	
C409.2-12e	16012993	

Options/Accessories			C409.2-0,8e up to C409.2-2,4e	×	C409.2-4,0e C409.2-7,0e	×	C409.2-12e	×
Special connection	Special connection (plug) für power supply		✆		✆		✆	
	In combination with cTÜVus		–		–		–	
Console 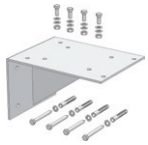	for wall mounting incl. fixing screws	1.4301	90023875		90023875		90023875	
		PP	90023848		90023848		90023848	
Dosing kit 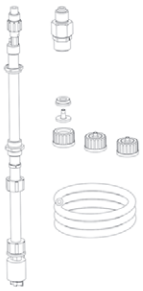	**Dosing kit - Level switch 1-stage** cons. of: 1 Pc. SL-11.1, PVC-U, PTFE-ball, 600 mm, plug M12 3 Pc. Hose screwings for PVC-U-hose 10 m. PVC-U-hose 6/12 1 Pc. Dosing valve 691.1, PP/PP-FRP, EPDM, PTFE, 0,5 bar		37604799		37604821		37604821	
	Option: SL-11.1 - 1000 mm		▲		▲		▲	
	Option: Dosing valve 691.1, PVC-U, EPDM, PTFE, 1 bar		▲		▲		▲	
	Dosing kit - Level switch 2-stage cons. of: 1 Pc. SL-12.1, PVC-U, PTFE-ball, 600 mm, plug M12 3 Pc. Hose screwings for PVC-U-hose 10 m. PVC-U-hose 6/12 1 Pc. Dosing valve 691.1, PP/PP-FRP, EPDM, PTFE, 0,5 bar		37604800		37604822		37604822	
	Option: SL-12.1 - 1000 mm		▲		▲		▲	
	Option: Dosing valve 691.1, PVC-U, EPDM, PTFE, 1 bar		▲		▲		▲	

● = Basis design – = not available ▲ = with add. price ✆ = on request ❍ = without add. price Art.-No. = available in basic design/ accessories

© 2015 **sera GmbH**
Subject to technical modifications.

Fittings for suction side of dosing pumps		C409.2-0,8e up to C409.2-2,4e		C409.2-4,0e C409.2-7,0e		C409.2-12e	
		Type	p.	Type	p.	Type	p.
Pulsation damper without separating diaphragm	**PVC-U / PP / 1.4571**	✆		✆		✆	
Suction lance	**with level switch 1-stage**	SL-11.1	3.28	SL-11.1	3.28	SL-11.1	3.28
	with level switch 2-stage	SL-12.1	3.28	SL-12.1	3.28	SL-12.1	3.28
	without level switch	S-01	3.34	S-01	3.34	S-01	3.34
Priming aid	**transparent PVC-U**	769.1	3.52	769.1	3.52	769.1	3.52
Calibration Pot	**PVC-U**	791.1	3.56	791.1	3.56	792.1	3.56
Foot valve	**PVC-U**	731	3.58	731	3.58	731	3.58
	1.4571	731	3.60	731	3.60	731	3.60
	PP-FRP / PVDF-FRP	781.1	3.64	781.1	3.64	781.1	3.64
Line strainer	**PVC-U / PP / PVDF / 1.4408**	✆		✆		✆	

Fittings for pressure side of dosing pumps		C409.2-0,8e up to C409.2-2,4e		C409.2-4,0e C409.2-7,0e		C409.2-12e	
		Type	p.	Type	p.	Type	p.
Diaphragm-type relief valve		620.10	3.4	620.10	3.4	620.10	3.4
Diaphragm-type pressure keeping valve		620.D	3.6	620.D	3.6	620.D	3.6
Multi-function valve	**4 bar opening pressure**	MFV 05004	3.8	MFV 05004	3.8	MFV 05004	3.8
	6 bar opening pressure	MFV 05006	3.8	MFV 05006	3.8	MFV 05006	3.8
	10 bar opening pressure	MFV 05010	3.8	MFV 05010	3.8	MFV 05010	3.8
Pulsation damper without separating diaphragm	**PVC-U / PP / 1.4571**	✆		✆		✆	
Diaphragm-pulsation damper with PTFE/PTFE-faced diaphragm	**PVC-U / PP / PVDF**	720.1	3.16	720.1	3.16	720.1	3.16
	1.4571	721.1	3.20	721.1	3.20	721.1	3.20
Diaphragm-pulsation damper with Elastomer-diaphragm	**1.4571**	810.1-0,16/10	3.22	810.1-0,16/10	3.22	810.1-0,16/10	3.22
Check valve	**PVC-U / PP-FRP / PVDF-FRP**	✆		✆		✆	
	1.4571	✆		✆		✆	
Dosing valve	**PVC-U**	691.1	3.40	691.1	3.40	691.1	3.40
	PP-FRP / PVDF-FRP	691.1	3.40	691.1	3.40	691.1	3.40
	1.4571	691.1	3.40	691.1	3.40	691.1	3.40
	PVC-U / PP / PVDF	681.1	3.44	681.1	3.44	681.1	3.44
Injection fitting	**PVC-U / PP / PVDF**	8061.1	3.46	8061.1	3.46	8061.1	3.46

The above allocation considers the fittings which have to be used at least regarding their nominal width in order to ensure the safe and trouble-free operation of the respective pumps when feeding liquids which are resembling to water.
Absolutely note the max. admissible operating pressure of the fittings.
The use of fittings of a bigger nominal width is unproblematically possible in most cases.
When choosing the fittings note the installation instructions for dosing pumps or confer with **sera**

© 2015 **sera GmbH**
Subject to technical modifications.

© 2015 **sera GmbH**
Subject to technical modifications.

C409.2 in survey

- Safe to run dry
- Leckage free
- Low maintenance
- Easy to use
- High dosing accuracy
- Multifunctional
- PROFIBUS - DP - interface
- Flexible
- Manuel stroke length and stroke frequency adjustment
- Robust metallic housing

Infobox

Order information	Page 2.28
Options/accessories	Page 2.28
Fittings-allocation	Page 2.33
Connecting pieces	Chapter 4
Resistance chart	Chapter 5
Installation examples	Chapter 5

2

Functions and operating modes

- Manual operation
- Manual stroke frequency adjustment
- PROFIBUS DP-VO slave Interface
- External START/STOP
- Pulse operation / fractinator
- Cycle delay unit
- Analogue operation (0/4-20 mA)*
- Analogue operation standardization
- Charge manual / with timer*
- Speed control / Slow mode
- 3 LED's for status indication
- Multiline illuminated text display
- Menu - driven parameterization
- Flow indication
- Calibration
- 4 - key operation
- 2 digital outputs (PLC)*
- 1 digital input (PLC or contact signal)*
- 2 analogue / digital inputs (optionally reversible)*
- Programmable input- / output functions*
- Connection / evaluation 2-stage level monitoring
- Diaphragm monitoring
- Connection / evaluation flow monitoring
- Connection / evaluation flow metering
- Voltage 210 - 250 V, 50/60 Hz
- 2m connecting cable wih Euro-plug

- * inapplicable when supplied with PROFIBUS DP - interface

Technical data

Type	Nominal capacity 50/60 Hz		Nominal stroke frequency 50/60 Hz	Capacity per stroke	Admiss. counterpressure	
	l/h	gal/h	1/min	ml/stroke	bar	psi
C409.2-18e	0 - 18	0 - 4,64	100	3	10	145
C409.2-25e	0 - 25	0 - 6,45	150	3	10	145
C409.2-50e	0 - 50	0 - 12,90	100	8,3	10	145
C409.2-75e	0 - 75	0 - 19,35	150	8,3	10	145
C409.2-90e	0 - 90	0 - 23,22	100	15	8	116
C409.2-115e	0 - 115	0 - 29,67	100	19,8	4	58
C409.2-140e	0 - 140	0 - 36,13	150	15	8	116
C409.2-180e	0 - 180	0 - 46,45	150	19,8	4	58
C409.2-250e	0 - 250	0 - 64,51	100	38,8	3	43,5
C409.2-350e	0 - 350	0 - 90,31	150	38,8	3	43,5

Type	Admiss. pressure at pump inlet		Max. suction height	Inlet/ Outlet nominal width	Max. stroke length		Motor output
	bar	psi	mWS	DN	mm	in	kW
C409.2-18e	-0,3 / 0	-4,3 / 0	3	10	6	0,24	0,18
C409.2-25e	-0,3 / 0	-4,3 / 0	3	10	6	0,24	0,18
C409.2-50e	-0,3 / 0	-4,3 / 0	3	10	8	0,31	0,18
C409.2-75e	-0,3 / 0	-4,3 / 0	3	15	8	0,31	0,37
C409.2-90e	-0,3 / 0	-4,3 / 0	3	15	10	0,39	0,37
C409.2-115e	-0,3 / 0	-4,3 / 0	3	15	10	0,39	0,37
C409.2-140e	-0,3 / 0	-4,3 / 0	3	15	10	0,39	0,37
C409.2-180e	-0,3 / 0	-4,3 / 0	3	15	10	0,39	0,37
C409.2-250e	-0,3 / 0	-4,3 / 0	3	15	10	0,39	0,37
C409.2-350e	-0,3 / 0	-4,3 / 0	3	15	10	0,39	0,37

© 2015 **sera GmbH**
Subject to technical modifications.

Dimensional drawing

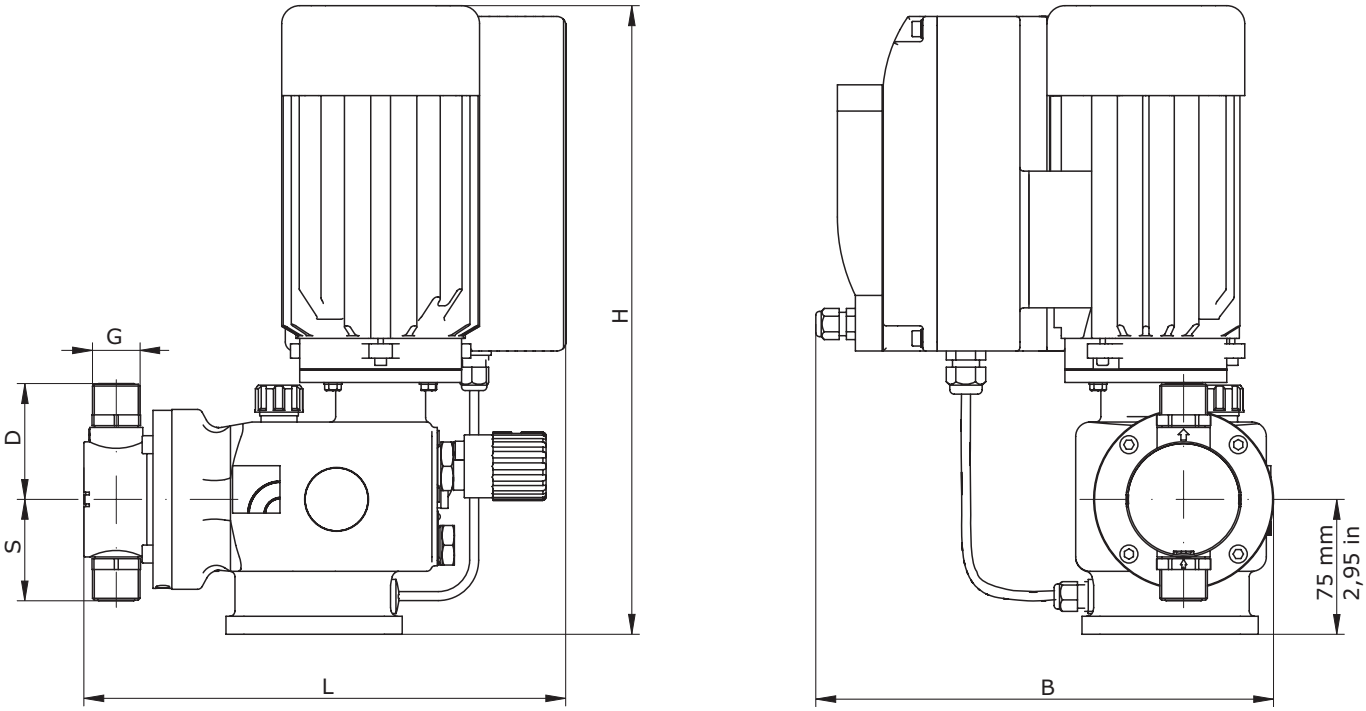

Dimensional chart

Indications in mm / inch

Type	G	S		D	
		mm	in	mm	in
C409.2-18e	G 3/4	56	2,2	64	2,52
C409.2-25e	G 3/4	56	2,2	64	2,52
C409.2-50e	G 3/4	69	2,72	69	2,72
C409.2-75e	G 3/4	69	2,72	69	2,72
C409.2-90e	G 3/4	76	2,99	76	2,99
C409.2-115e	G 3/4	76	2,99	76	2,99
C409.2-140e	G 3/4	76	2,99	76	2,99
C409.2-180e	G 3/4	76	2,99	76	2,99
C409.2-250e	G 1 1/4	122	4,8	122	4,8
C409.2-350e	G 1 1/4	122	4,8	122	4,8

Type	L		B		H		Weight
	mm	in	mm	in	mm	in	kg
C409.2-18e	270	10,63	250	9,84	380	14,96	12,6
C409.2-25e	270	10,63	250	9,84	380	14,96	12,6
C409.2-50e	270	10,63	250	9,84	380	14,96	12,4
C409.2-75e	270	10,63	250	9,84	380	14,96	12,4
C409.2-90e	275	10,83	255	10,04	380	14,96	14,5
C409.2-115e	275	10,83	255	10,04	380	14,96	13
C409.2-140e	275	10,83	255	10,04	380	14,96	14,5
C409.2-180e	275	10,83	255	10,04	380	14,96	13
C409.2-250e	330	12,99	285	11,22	380	14,96	17
C409.2-350e	330	12,99	285	11,22	380	14,96	17

■ Indication of weight for basic design acc. to order information

© 2015 **sera GmbH**
Subject to technical modifications.

Order information

Basic design

C409.2-18e to C409.2-25e
- Pump body PP-FRP
- Double valves PP-FRP
- Valve balls PTFE
- Valve seals FPM
- Working diaphragm PTFE-faced
- Diaphragm monitoring
- 5m Control cable 8-pole

C409.2-50e to C409.2-90e and C409.2-140e
- Pump body PP-FRP
- Single valves PP-FRP
- Valve balls PTFE
- Valve seals FPM
- Working diaphragm PTFE-faced
- Diaphragm monitoring
- 5m Control cable 8-pole

C409.2-115e and C409.2-180e
- Pump body PP-FRP
- Single valves PP-FRP
- Valve balls PTFE
- Valve seals FPM
- Working diaphragm EPDM
- Diaphragm monitoring
- 5m Control cable 8-pole

C409.2-250e and C409.2-350e
- Pump body PP
- Single valve PP-FRP
- Valve balls PTFE
- Valve seals FPM
- Working diaphragm PTFE-faced
- Diaphragm monitoring
- 5m Control cable 8-pole

Motor:
- 210-250V, 50/60Hz, 1~, IP55, ISO F

Further options and accessories
- Connection pieces see chapter 4
- Product documentation see chapter 5

Type	Basic design		×
		Art.-no.	
C409.2-18e		16013570	
C409.2-25e		16012227	
C409.2-50e		16010976	
C409.2-75e		16012450	
C409.2-90e		16020747	
C409.2-115e		16020562	
C409.2-140e		16014273	
C409.2-180e		16021634	
C409.2-250e		16012225	
C409.2-350e		16011908	

Options/Accessories			C409.2-18e C409.2-25e	×	C409.2-50e C409.2-75e	×	C409.2-90e C409.2-140e	×	C409.2-115e C409.2-180e	×	C409.2-250e C409.2-350e	×
Pump body and valves	PP-FRP	single valves PP-FRP	–		●		●		●		–	
		double valves PP-FRP	●		❍		❍		❍		–	
	PP	single valves PP-FRP	–		–		–		–		●	
	PVC-U	single valves PVC-U	▲		▲		▲		▲		▲	
	PVDF-FRP	single valves PVDF-FRP	–		▲		▲		▲		–	
		double valves PVDF-FRP	▲		▲		▲		▲		–	
	PVDF	single valves PVDF-FRP	–		–		–		–		▲	
		double valves PVDF-FRP	–		–		–		–		▲	
	1.4571	single valves 1.4571/1.4581	–		–		–		–		▲	
		double valves 1.4571/1.4581	▲		▲		▲		▲		▲	
Valve balls 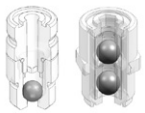	PTFE	single valves	❍		●		●		●		●	
		double valves	●		▲		▲		▲		▲	
	1.4401	single valves	❍		❍		❍		❍		❍	
		double valves	❍		❍		❍		❍		❍	
Valve sealings	FPM	single valves	❍		●		●		●		●	
		double valves	●		❍		❍		❍		❍	
	EPDM	single valves	❍		❍		❍		❍		❍	
		double valves	❍		❍		❍		❍		❍	
	FEP-covered	single valves	▲		▲		▲		▲		▲	
		double valves	▲		▲		▲		▲		▲	

● = Basis design – = not available ▲ = with add. price ✆ = on request ❍ = without add. price Art.-No. = available in basic design/ accessories

© 2015 sera GmbH
Subject to technical modifications.

Order information

Basic design

C409.2-18e to C409.2-25e
- Pump body PP-FRP
- Double valves PP-FRP
- Valve balls PTFE
- Valve seals FPM
- Working diaphragm PTFE-faced
- Diaphragm monitoring
- 5m Control cable 8-pole

C409.2-50e to C409.2-90e and C409.2-140e
- Pump body PP-FRP
- Single valves PP-FRP
- Valve balls PTFE
- Valve seals FPM
- Working diaphragm PTFE-faced
- Diaphragm monitoring
- 5m Control cable 8-pole

C409.2-115e and C409.2-180e
- Pump body PP-FRP
- Single valves PP-FRP
- Valve balls PTFE
- Valve seals FPM
- Working diaphragm EPDM
- Diaphragm monitoring
- 5m Control cable 8-pole

C409.2-250e and C409.2-350e
- Pump body PP
- Single valve PP-FRP
- Valve balls PTFE
- Valve seals FPM
- Working diaphragm PTFE-faced
- Diaphragm monitoring
- 5m Control cable 8-pole

Motor:
- 210-250V, 50/60Hz, 1~, IP55, ISO F

Further options and accessories
- Connection pieces see chapter 4
- Product documentation see chapter 5

Type	Basic design		×
		Art.-no.	
C409.2-18e		16013570	
C409.2-25e		16012227	
C409.2-50e		16010976	
C409.2-75e		16012450	
C409.2-90e		16020747	
C409.2-115e		16020562	
C409.2-140e		16014273	
C409.2-180e		16021634	
C409.2-250e		16012225	
C409.2-350e		16011908	

2

Options/Accessories		C409.2-18e C409.2-25e	×	C409.2-50e C409.2-75e	×	C409.2-90e C409.2-140e	×	C409.2-115e C409.2-180e	×	C409.2-250e C409.2-350e	×
Automatic self ventilating 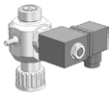	Controllable vent valve mounted on pump pressure joint Valve body: PP / Valve ball: PTFE / Sealings: EPDM Voltage 190-240 V, 50/60 Hz	▲		–		–		–		–	
Intergrated relief valve 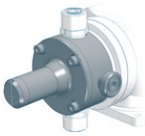	with PTFE-faced diaphragm, connection seal FPM or EPDM at pump body made of:										
	PP	▲		▲		▲		▲		▲	
	PVC-U	▲		▲		▲		▲		▲	
	PVDF	✆		✆		✆		✆		✆	
	1.4571	▲		▲		▲		▲		▲	
	Connection seals FEP-covered	▲		▲		▲		▲		▲	
Working diaphragms 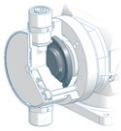	EPDM	–		–		–		●		–	
	PTFE-faced	●		●		●		–		●	
	FPM	–		–		–		▲		–	
Stroke length adjustment 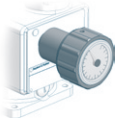	with position indicator	▲		▲		▲		▲		▲	
Stroke length adjustment electrical 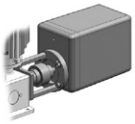	**Actuator N C1-BA** 230 V, +/- 10%, 50/60 Hz, 128s/10 U, 1,5 Nm incl. mounting plate for actuator	▲		▲		▲		▲		▲	
	Electronic positioning controller PMR3 input signal 0/4-20 mA incl. feedback signal 0/4-20 mA (only in N C1-BA integrated)	▲		▲		▲		▲		▲	
	In combination with cTÜVus	✆		✆		✆		✆		✆	

● = Basis design – = not available ▲ = with add. price ✆ = on request ❍ = without add. price Art.-No. = available in basic design/ accessories

© 2015 **sera GmbH**
Subject to technical modifications.

Order information

Basic design

C409.2-18e to C409.2-25e
- Pump body PP-FRP
- Double valves PP-FRP
- Valve balls PTFE
- Valve seals FPM
- Working diaphragm PTFE-faced
- Diaphragm monitoring
- 5m Control cable 8-pole

C409.2-50e to C409.2-90e and C409.2-140e
- Pump body PP-FRP
- Single valves PP-FRP
- Valve balls PTFE
- Valve seals FPM
- Working diaphragm PTFE-faced
- Diaphragm monitoring
- 5m Control cable 8-pole

C409.2-115e and C409.2-180e
- Pump body PP-FRP
- Single valves PP-FRP
- Valve balls PTFE
- Valve seals FPM
- Working diaphragm EPDM
- Diaphragm monitoring
- 5m Control cable 8-pole

C409.2-250e und C409.2-350e
- Pump body PP
- Single valve PP-FRP
- Valve balls PTFE
- Valve seals FPM
- Working diaphragm PTFE-faced
- Diaphragm monitoring
- 5m Control cable 8-pole

Motor:
- 210-250V, 50/60Hz, 1~, IP55, ISO F

Further options and accessories
- Connection pieces see chapter 4
- Product documentation see chapter 5

Type	Basic design		×
		Art.-no.	
C409.2-18e		16013570	
C409.2-25e		16012227	
C409.2-50e		16010976	
C409.2-75e		16012450	
C409.2-90e		16020747	
C409.2-115e		16020562	
C409.2-140e		16014273	
C409.2-180e		16021634	
C409.2-250e		16012225	
C409.2-350e		16011908	

Options/Accessories		C409.2-18e C409.2-25e	×	C409.2-50e C409.2-75e	×	C409.2-90e C409.2-140e	×	C409.2-115e C409.2-180e	×	C409.2-250e C409.2-350e	×
Profibus	Profibus-interface: **Profibus DP-V0 (slave)** Bit rate: **Automatic 9,6 kbit/s – 12 Mbit/s** Connection to dosing pump: **M12-cable box, 5-pole, B-coded**	▲		▲		▲		▲		▲	
	Profibus Y-distributor M12x1, 5-pole, IP67	90025526		90025526		90025526		90025526		90025526	
	Profibus T-distributor M12x1, 5-pole, IP67	90022889		90022889		90022889		90022889		90022889	
	Profibus terminating resistor M12x1, 5-pole, IP67	90022890		90022890		90022890		90022890		90022890	
	In combination with cTÜVus	–		–		–		–		–	
Drive motor	Connection voltage 115V / 50/60 Hz	✆		✆		✆		✆		✆	
	In combination with cTÜVus	–		–		–		–		–	
Control electronics	Remote-design, for wall mounting incl. 3m cable and fixing materials	▲		▲		▲		▲		▲	
Control electronics	In design cTÜVus, Connection voltage 100V - 120V +/-5%, 60Hz, 2m cable with US-/ CDN-plug	▲		▲		▲		▲		▲	
	In combination with option automatic self ventilating	▲		–		–		–		–	

● = Basis design – = not available ▲ = with add. price ✆ = on request ❍ = without add. price Art.-No. = available in basic design/ accessories

© 2015 **sera GmbH**
Subject to technical modifications.

Order information

Basic design

C409.2-18e to C409.2-25e
- Pump body PP-FRP
- Double valves PP-FRP
- Valve balls PTFE
- Valve seals FPM
- Working diaphragm PTFE-faced
- Diaphragm monitoring
- 5m Control cable 8-pole

C409.2-50e to C409.2-90e and C409.2-140e
- Pump body PP-FRP
- Single valves PP-FRP
- Valve balls PTFE
- Valve seals FPM
- Working diaphragm PTFE-faced
- Diaphragm monitoring
- 5m Control cable 8-pole

C409.2-115e and C409.2-180e
- Pump body PP-FRP
- Single valves PP-FRP
- Valve balls PTFE
- Valve seals FPM
- Working diaphragm EPDM
- Diaphragm monitoring
- 5m Control cable 8-pole

C409.2-250e und C409.2-350e
- Pump body PP
- Single valve PP-FRP
- Valve balls PTFE
- Valve seals FPM
- Working diaphragm PTFE-faced
- Diaphragm monitoring
- 5m Control cable 8-pole

Motor:
- 210-250V, 50/60Hz, 1~, IP55, ISO F

Further options and accessories
- Connection pieces see chapter 4
- Product documentation see chapter 5

Type	Basic design		×
		Art.-no.	
C409.2-18e		16013570	
C409.2-25e		16012227	
C409.2-50e		16010976	
C409.2-75e		16012450	
C409.2-90e		16020747	
C409.2-115e		16020562	
C409.2-140e		16014273	
C409.2-180e		16021634	
C409.2-250e		16012225	
C409.2-350e		16011908	

2

Options/Accessories		C409.2-18e C409.2-25e ×	C409.2-50e C409.2-75e ×	C409.2-90e C409.2-140e ×	C409.2-115e C409.2-180e ×	C409.2-250e C409.2-350e ×
Flow controller	IP65 incl. cable 0,6m and cable bax M12 - 5-pole (bushing for pump connection) Material valve seals: FPM Thread connection 8191.1/8192.1: Input: G 3/4 (IG), output: G 3/4 Thread connection 8193.1: Input: G 1 (inlet), output: G 1 (outlet) max. pressure: 10 bar					
8191.1	PVC-U/FPM	37602227	–	–	–	–
	PP/FPM	37602175	–	–	–	–
8192.1	PVC-U/FPM	–	37602176	37602176	37602176	–
	PP/FPM	–	37602177	37602177	37602177	–
8193.1	PVC-U/FPM	–	–	–	–	37602178
	PP/FPM	–	–	–	–	37602240
Flow meter	IP65 incl. cable 0,6m and cable box M12 5-pole (bushing for pump connection) Connection 8012.1 - 8014.1: Inlet: G 3/4 (inside); Outlet G 3/4 (outside) Connection 8015.1: Inlet: G1 1/4 (inside); Outlet G1 1/4 (outside) Max. operating pressure: 10 bar					
8012.1	PVC-U/FPM	37602277	–	–	–	–
	PVDF/FPM	37602307	–	–	–	–
8013.1	PVC-U/FPM	–	37602279	–	–	–
	PVDF/FPM	–	37602309	–	–	–
8014.1	PVC-U/FPM	–	–	37602281	37602281	–
	PVDF/FPM	–	–	37602311	37602311	–
8015.1	PVC-U/FPM	–	–	–	–	37602320
	PVDF/FPM	–	–	–	–	37602332
Seals made of EPDM		❍	❍	❍	❍	❍

● = Basis design – = not available ▲ = with add. price ✆ = on request ❍ = without add. price Art.-No. = available in basic design/ accessories

© 2015 **sera GmbH**
Subject to technical modifications.

Order information

Basic design

C409.2-18e to C409.2-25e
- Pump body PP-FRP
- Double valves PP-FRP
- Valve balls PTFE
- Valve seals FPM
- Working diaphragm PTFE-faced
- Diaphragm monitoring
- 5m Control cable 8-pole

C409.2-50e to C409.2-90e and C409.2-140e
- Pump body PP-FRP
- Single valves PP-FRP
- Valve balls PTFE
- Valve seals FPM
- Working diaphragm PTFE-faced
- Diaphragm monitoring
- 5m Control cable 8-pole

C409.2-115e and C409.2-180e
- Pump body PP-FRP
- Single valves PP-FRP
- Valve balls PTFE
- Valve seals FPM
- Working diaphragm EPDM
- Diaphragm monitoring
- 5m Control cable 8-pole

C409.2-250e und C409.2-350e
- Pump body PP
- Single valve PP-FRP
- Valve balls PTFE
- Valve seals FPM
- Working diaphragm PTFE-faced
- Diaphragm monitoring
- 5m Control cable 8-pole

Motor:
- 210-250V, 50/60Hz, 1~, IP55, ISO F

Further options and accessories
- Connection pieces see chapter 4
- Product documentation see chapter 5

Type	Basic design		×
		Art.-no.	
C409.2-18e		16013570	
C409.2-25e		16012227	
C409.2-50e		16010976	
C409.2-75e		16012450	
C409.2-90e		16020747	
C409.2-115e		16020562	
C409.2-140e		16014273	
C409.2-180e		16021634	
C409.2-250e		16012225	
C409.2-350e		16011908	

Options/Accessories		C409.2-18e C409.2-25e	×	C409.2-50e C409.2-75e	×	C409.2-90e C409.2-140e	×	C409.2-115e C409.2-180e	×	C409.2-250e C409.2-350e	×
Control cable	M12 cable box 3-pole, 5 meter für level input (Level monitor not included)	90031245		90031245		90031245		90031245		90031245	
	M12 cable box 3-pole, ready-made for level input (Level monitor not included)	90022877		90022877		90022877		90022877		90022877	
Special connection	Special connection (plug) für power supply	✆		✆		✆		✆		✆	
	In combination with cTÜVus	–		–		–		–		–	
Console 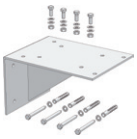	for wall mounting incl. fixing screws 1.4301	90023875		90023875		90023875		90023875		90023875	
	for wall mounting incl. fixing screws PP	90023848		90023848		90023848		90023848		90023848	

● = Basis design – = not available ▲ = with add. price ✆ = on request ❍ = without add. price Art.-No. = available in basic design/ accessories

© 2015 sera GmbH
Subject to technical modifications.

Fittings for suction side of dosing pumps		C409.2-18e C409.2-25e		C409.2-50e		C409.2-75e C409.2-90e		C409.2-115e up to C409.2-180e		C409.2-250e C409.2-350e	
		Type	p.	Type	p.	Type	p.	Type	p.	Type	p.
Pulsation damper without separating diaphragm	**PVC-U / PP / 1.4571**	✆		✆		✆		✆		✆	
Suction lance	**with level switch 1-stage**	SL-11.1	3.28	SL-02	3.30	SL-02	3.30	SL-02	3.30	SLP-151.1	3.32
	without level switch	S-01	3.34	S-01	3.34	S-01	3.34	S-01	3.34	S-01	3.34
	with level switch 2-stage	SL-12.1	3.28	SL-02	3.30	SL-02	3.30	SL-02	3.30	–	
Suction aid / Siphon Vessel	**transparent PVC-U**	770.2	3.54	770.2	3.54	770.2	3.54	770.2	3.54	770.2	3.54
Calibration Pot	**PVC-U**	792.1	3.56	792.1	3.56	793.1	3.56	794.1	3.56	795.1	3.56
Foot valve	**PVC-U**	731	3.60	731	3.60	731	3.60	731	3.60	732.3	3.58
	PP / PVDF	–		–		–		–		732	3.60
	1.4571	731	3.60	731	3.60	731	3.60	731	3.60	732	3.60
	PP-FRP / PVDF-FRP	781.1	3.64	781.1	3.64	781.1	3.64	781.1	3.64	783.1	3.64
Line strainer	**PVC-U / PP / PVDF / 1.4408**	✆		✆		✆		✆		✆	

Fittings for pressure side of dosing pumps		C409.2-18e C409.2-25e		C409.2-50e		C409.2-75e C409.2-90e		C409.2-115e up to C409.2-180e		C409.2-250e C409.2-350e	
		Type	p.	Type	p.	Type	p.	Type	p.	Type	p.
Diaphragm-type relief valve		620.10	3.4	620.10	3.4	622.10	3.4	622.10	3.4	622.10	3.4
Diaphragm-type pressure keeping valve		620.D	3.6	620.D	3.6	622.D	3.6	622.D	3.6	622.D	3.6
Multi-function valve	**4 bar opening pressure**	MFV 05004	3.8	MFV 05004	3.8	✆		✆		✆	
	6 bar opening pressure	MFV 05006	3.8	MFV 05006	3.8	✆		✆		✆	
	10 bar opening pressure	MFV 05010	3.8	MFV 05010	3.8	✆		✆		✆	
Pulsation damper without separating diaphragm	**PVC-U / PP / 1.4571**	✆		✆		✆		✆		✆	
Diaphragm-pulsation damper with PTFE/PTFE-faced diaphragm	**PVC-U / PP / PVDF**	720.1	3.16	721.2	3.16	722.1	3.16	722.1	3.16	723.1	3.16
	1.4571	721.1	3.20	721.1	3.20	722.1	3.20	722.1	3.20	723.1	3.20
Diaphragm-pulsation damper with Elastomer-diaphragm	**PVC-U / PP / PVDF**	✆		✆		✆		✆		713.1	3.12
	1.4571	810.1-0,16/10	3.22	810.1-0,16/10	3.22	810.1-0,32/10	3.22	810.1-0,32/10	3.22	810.1-0,75/10	3.22
Check valve	**PVC-U**	✆		✆		✆		✆		✆	
	PP-FRP / PVDF-FRP	✆		✆		✆		✆		✆	
	1.4571	✆		✆		✆		✆		✆	
Dosing valve	**PP-FRP / PVDF-FRP**	691.1	3.40	691.1	3.40	691.1	3.40	691.1	3.40	693.1	3.40
	PVC-U	691.1	3.40	691.1	3.40	691.1	3.40	691.1	3.40	✆	
	1.4571	691.1	3.40	691.1	3.40	691.1	3.40	691.1	3.40	692.1	3.40
	PVC-U / PP / PVDF	681.1	3.44	681.1	3.44	681.1	3.44	681.1	3.44	682.1	3.44
Injection fitting	**PVC-U / PP / PVDF**	8061.1	3.46	8061.1	3.46	8061.1	3.46	8061.1	3.46	8062.1	3.46

The above allocation considers the fittings which have to be used at least regarding their nominal width in order to ensure the safe and trouble-free operation of the respective pumps when feeding liquids which are resembling to water.

Absolutely note the max. admissible operating pressure of the fittings.

The use of fittings of a bigger nominal width is unproblematically possible in most cases.

When choosing the fittings note the installation instructions for dosing pumps or confer with **sera.**

© 2015 **sera GmbH**
Subject to technical modifications.

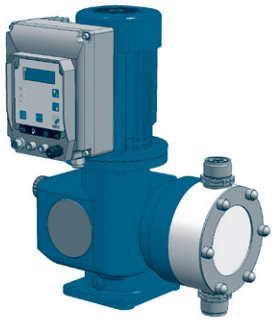

C410.2 in survey

- Safe to run dry
- Leckage free
- Low maintenance
- Easy to use
- High dosing accuracy
- Multifunctional
- PROFIBUS - DP - interface
- Flexible
- Manuel stroke length and stroke frequency adjustment
- Robust metallic housing

Infobox

Order information	Page 2.36
Options/accessories	Page 2.36
Fittings-allocation	Page 2.39
Connecting pieces	Chapter 4
Resistance chart	Chapter 5
Installation examples	Chapter 5

2

Functions and operating modes

- Manual operation
- Manual stroke frequency adjustment
- PROFIBUS DP-VO slave Interface
- External START/STOP
- Pulse operation / fractinator
- Cycle delay unit
- Analogue operation (0/4-20 mA)*
- Analogue operation standardization
- Charge manual / with timer*
- Speed control / Slow mode
- 3 LED's for status indication
- Multiline illuminated text display
- Menu - driven parameterization
- Flow indication
- Calibration
- 4 - key operation
- 2 digital outputs (PLC)*
- 1 digital input (PLC or contact signal)*
- 2 analogue / digital inputs (optionally reversible)*
- Programmable input- / output functions*
- Connection / evaluation 2-stage level monitoring
- Diaphragm monitoring
- Connection / evaluation flow monitoring
- Connection / evaluation flow metering
- Voltage 210 - 250 V, 50/60 Hz (0,37 kW)
- Voltage 3~380 - 420 V/N/PE, 50/60 Hz (0,75/1,5 kW)
- 2m connection cable with Euro-plug (0,37 kW)
- 2m connection cable with CEE-plug, 5-pole (0,75/1,5 kW)
- * inapplicable when supplied with PROFIBUS DP - interface

Technical data

Type	Nominal capacity 50/60 Hz		Nominal stroke frequency 50/60 Hz	Capacity per stroke	Admiss. counterpressure	
	l/h	gal/h	1/min	ml/stroke	bar	psi
C410.2-260e	0 - 260	0 - 68,68	90	48	4	58
C410.2-280e	0 - 280	0 - 73,97	97	46	8	116
C410.2-510e	0 - 510	0 - 134,73	90	94	3	43,5
C410.2-570e	0 - 570	0 - 150,58	97	98	6	87
C410.2-850e	0 - 850	0 - 224,55	90	157	2	29
C410.2-900e	0 - 900	0 - 237,75	97	155	5	72,5
C410.2-1450e	0 - 1.450	0 - 383,05	97	245	5	72,5

Type	Admiss. pressure at pump inlet		Max. suction height	Inlet/ Outlet nominal width	Max. stroke length		Motor output
	bar	psi	mWC	DN	mm	in	kW
C410.2-260e	-0,5 / 0	-7,2 / 0	5	15	13	0,51	0,37
C410.2-280e	-0,5 / 0	-7,2 / 0	5	15	13	0,51	0,75
C410.2-510e	-0,5 / 0	-7,2 / 0	5	15	13	0,51	0,37
C410.2-570e	-0,5 / 0	-7,2 / 0	5	15	13	0,51	0,75
C410.2-850e	-0,3 / 0	-4,3 / 0	3	20	13	0,51	0,37
C410.2-900e	-0,3 / 0	-4,3 / 0	3	20	13	0,51	1,5
C410.2-1450e	-0,3 / 0	-4,3 / 0	3	25	20	0,79	1,5

© 2015 sera GmbH
Subject to technical modifications.

Dimensional drawing

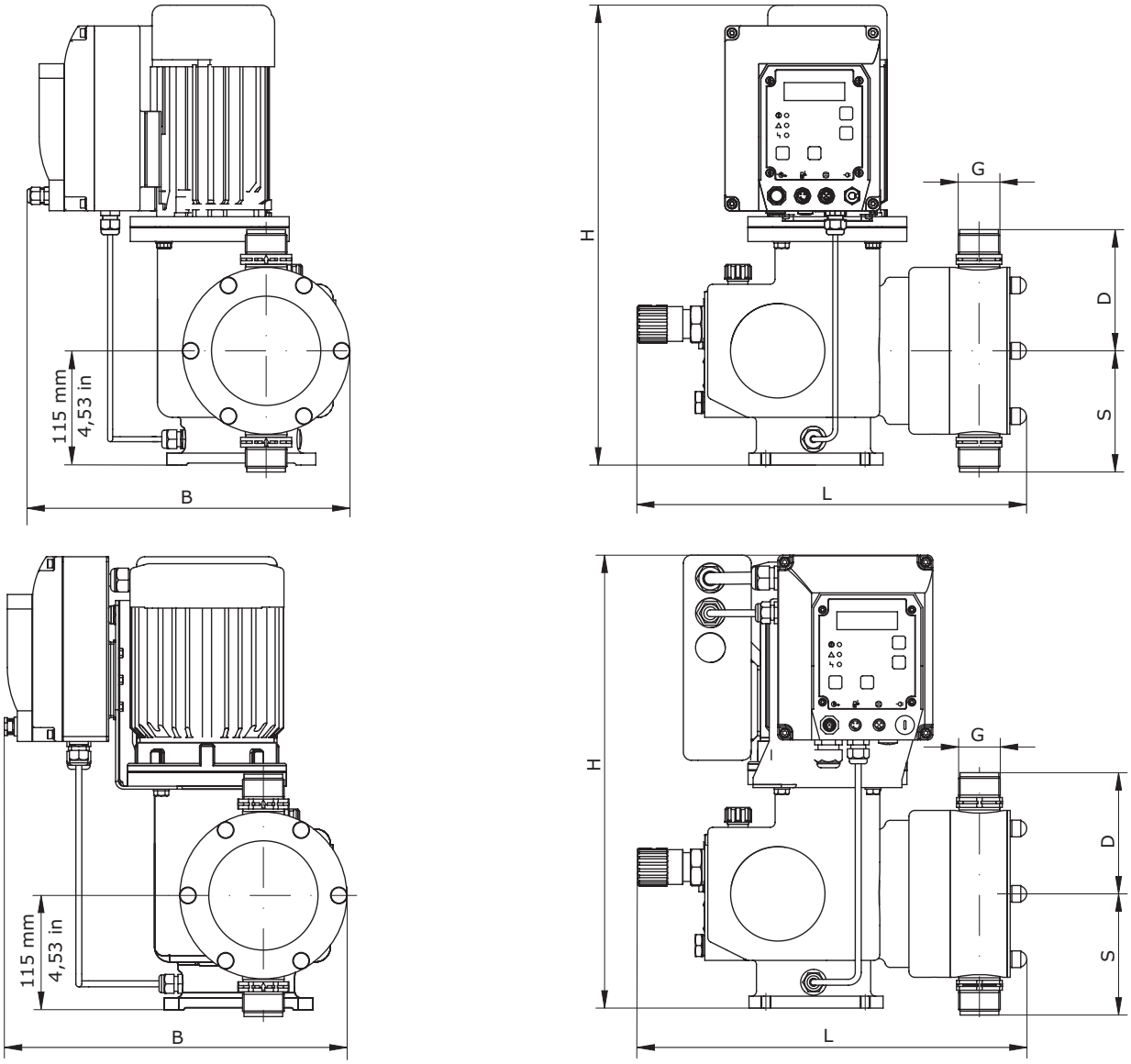

Dimensional chart

Indications in mm / inch

Type	G	S		D	
		mm	in	mm	in
C410.2-260e	G 1 1/4	122	4,8	122	4,8
C410.2-280e	G 1 1/4	122	4,8	122	4,8
C410.2-510e	G 1 1/4	122	4,8	122	4,8
C410.2-570e	G 1 1/4	122	4,8	122	4,8
C410.2-850e	G 1 1/4	148	5,83	148	5,83
C410.2-900e	G 1 1/4	148	5,83	148	5,83
C410.2-1450e	G 1 1/4	148	5,83	148	5,83

Type	L		B		H		Weight
	mm	in	mm	in	mm	in	kg
C410.2-260e	405	15,94	330	12,99	465	18,31	29
C410.2-280e	405	15,94	380	14,96	450	17,72	43,2
C410.2-510e	405	15,94	330	12,99	465	18,31	29
C410.2-570e	405	15,94	380	14,96	450	17,72	43,2
C410.2-850e	480	18,9	355	13,98	465	18,31	35
C410.2-900e	480	18,9	380	14,96	450	17,72	45,1
C410.2-1450e	480	18,9	380	14,96	490	19,29	45,1

■ Indication of weight for basic design acc. to order information

© 2015 **sera GmbH**
Subject to technical modifications.

Order information

Basic design

C410.2-260e / C410.2-510e / C410.2-850e
- Pump body PP
- Single valve PP-FRP
- Valve balls PTFE
- Valve seals FPM
- Working diaphragm PTFE-faced
- Diaphragm monitoring
- 5m control cable 8-pole

Motor:
- 210-250V, 50/60Hz, 1~, IP55, ISO F

C410.2-280e / C410.2-570e / C410.2-900e / C410.2-1450e
- Pump body PP
- Single valve PP-FRP
- Valve balls PTFE
- Valve seals FPM
- Working diaphragm PTFE-faced
- Diaphragm monitoring
- 5m control cable 8-pole

Motor:
- 3~380-420V/N/PE. 50/60HZ,
- IP55, ISO F

Further options and accessories
- Connection pieces see chapter 4
- Product documentation see chapter 5

Type	Basic design		×
		Art.-no.	
C410.2-260e		16012651	
C410.2-280e		16012455	
C410.2-510e		16014073	
C410.2-570e		16013841	
C410.2-850e		16021635	
C410.2-900e		16014071	
C410.2-1450e		16014975	

Options/Accessories			C410.2-260e C410.2-280e	×	C410.2-510e C410.2-570e	×	C410.2-850e C410.2-900e	×	C410.2-1450	×
Pump body and valves	PP	single valves PP-FRP	●		●		●		●	
	PVC-U	single valves PVC-U	▲		▲		▲		▲	
	PVDF	single valves PVDF-FRP	▲		▲		▲		▲	
	1.4571	single valves 1.4571/1.4581	▲		▲		▲		▲	
Valve balls 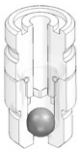	PTFE	single valves	●		●		●		●	
	1.4401	single valves	❍		❍		❍		❍	
Valve sealings	FPM	single valves	●		●		●		●	
	EPDM	single valves	❍		❍		❍		❍	
	FEP-covered	single valves	▲		▲		▲		▲	
Intergrated relief valve 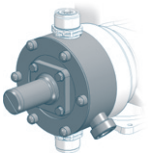	with PTFE-faced diaphragm, connection seal FPM or EPDM at pump body made of:									
	PP / PVC-U		▲		▲		–		–	
	PVDF		✆		✆		–		–	
	1.4571		▲		▲		–		–	
	Connection seals FEP-covered		▲		▲		–		–	
Stroke length adjustment 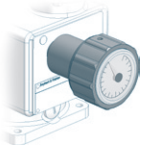	with position indicator		▲		▲		▲		▲	

● = Basis design – = not available ▲ = with add. price ✆ = on request ❍ = without add. price Art.-No. = available in basic design/ accessories

© 2015 sera GmbH
Subject to technical modifications.

Order information

Basic design

C410.2-260e / C410.2-510e / C410.2-850e

- Pump body PP
- Single valve PP-FRP
- Valve balls PTFE
- Valve seals FPM
- Working diaphragm PTFE-faced
- Diaphragm monitoring
- 5m control cable 8-pole

Motor:

- 210-250V, 50/60Hz, 1~, IP55, ISO F

C410.2-280e / C410.2-570e / C410.2-900e / C410.2-1450e

- Pump body PP
- Single valve PP-FRP
- Valve balls PTFE
- Valve seals FPM
- Working diaphragm PTFE-faced
- Diaphragm monitoring
- 5m control cable 8-pole

Motor:

- 3~380-420V/N/PE. 50/60HZ,
- IP55, ISO F

Further options and accessories

- Connection pieces see chapter 4
- Product documentation see chapter 5

Type	Basic design		×
		Art.-no.	
C410.2-260e		16012651	
C410.2-280e		16012455	
C410.2-510e		16014073	
C410.2-570e		16013841	
C410.2-850e		16021635	
C410.2-900e		16014071	
C410.2-1450e		16014975	

2

Options/Accessories		C410.2-260e C410.2-280e	×	C410.2-510e C410.2-570e	×	C410.2-850e C410.2-900e	×	C410.2-1450	×
Stroke length adjustment electrical 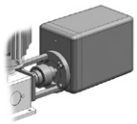	Actuator N1S 230 V, 50/60 Hz, 128s/10 U, 15 Nm Potentiometer 1 kOhm incl. mounting kit for actuator	▲		▲		▲		▲	
	Electronic positioning controller PMR3 input signal 0/4-20 mA incl. feedback signal 0/4-20 mA (only in N 1S integrated)	▲		▲		▲		▲	
Profibus	Profibus-interface: **Profibus DP-V0 (slave)** Bit rate: **Automatic 9,6 kbit/s – 12 Mbit/s** Connection to dosing pump: **M12-cable box, 5-pole, B-coded**	▲		▲		▲		▲	
	Profibus Y-distributor M12x1, 5-pole, IP67	90025526		90025526		90025526		90025526	
	Profibus T-distributor M12x1, 5-pole, IP67	90022889		90022889		90022889		90022889	
	Profibus terminating resistor M12x1, 5-pole, IP67	90022890		90022890		90022890		90022890	
Control electronics	Remote-design, for wall mounting incl. 3m cable and fixing materials	▲		▲		▲		▲	
Flow meter	IP65 incl. cable 0,6m and cable box M12 5-pole (bushing for pump connection) Connection: Inlet G1 1/4 (inside), Outlet G1 1/4 (outside)** Max. operating pressure: 10 bar								
	8015.1 PVC-U/FPM	37602320		–		–		–	
	8015.1 PVDF/FPM	37602332		–		–		–	
	8016.1 PVC-U/FPM	–		37602322		–		–	
	8016.1 PVDF/FPM	–		✆		–		–	
	8017.1 PVC-U/FPM	–		–		37602323		37602323	
	8017.1 PVDF/FPM	–		–		37602335		37602335	
	Seals made of EPDM	❍		❍		❍		❍	

● = Basis design – = not available ▲ = with add. price ✆ = on request ❍ = without add. price Art.-No. = available in basic design/ accessories

© 2015 **sera GmbH**
Subject to technical modifications.

Order information

Basic design

C410.2-260e / C410.2-510e / C410.2-850e

- Pump body PP
- Single valve PP-FRP
- Valve balls PTFE
- Valve seals FPM
- Working diaphragm PTFE-faced
- Diaphragm monitoring
- 5m control cable 8-pole

Motor:

- 210-250V, 50/60Hz, 1~, IP55, ISO F

C410.2-280e / C410.2-570e / C410.2-900e / C410.2-1450e

- Pump body PP
- Single valve PP-FRP
- Valve balls PTFE
- Valve seals FPM
- Working diaphragm PTFE-faced
- Diaphragm monitoring
- 5m control cable 8-pole

Motor:

- 3~380-420V/N/PE. 50/60HZ,
- IP55, ISO F

Further options and accessories

- Connection pieces see chapter 4
- Product documentation see chapter 5

Type	Basic design		×
		Art.-no.	
C410.2-260e		16012651	
C410.2-280e		16012455	
C410.2-510e		16014073	
C410.2-570e		16013841	
C410.2-850e		16021635	
C410.2-900e		16014071	
C410.2-1450e		16014975	

Options/Accessories			C410.2-260e C410.2-280e	×	C410.2-510e C410.2-570e	×	C410.2-850e C410.2-900e	×	C410.2-1450	×
Control cable	M12 cable box 3-pole, 5 meter für level input (Level monitor not included)		90031245		90031245		90031245		90031245	
	M12 cable box 3-pole, ready-made for level input (Level monitor not included)		90022877		90022877		90022877		90022877	
Special connection	Special connection (plug) für power supply		✆		✆		✆		✆	
Console 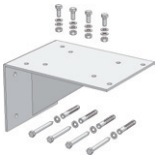	for wall mounting incl. fixing screws	1.4301	90023876		90023876		90023876		90023876	
		PP	90023849		90023849		90023849		90023849	

● = Basis design – = not available ▲ = with add. price ✆ = on request ❍ = without add. price Art.-No. = available in basic design/ accessories

© 2015 **sera GmbH**
Subject to technical modifications.

Fittings for suction side of dosing pumps		C410.2-280e C410.2-280e		C410.2-510e C410.2-570e		C410.2-850e C410.2-900e		C410.2-1450e	
		Type	p.	Type	p.	Type	p.	Type	p.
Pulsation damper without separating diaphragm	**PVC-U / PP / 1.4571**	✆		✆		✆		✆	
Suction lance	**with level switch 1-stage**	SLP-151.1	3.32	SLP-151.1	3.32	✆		✆	
	with level switch 2-stage	SLP-152.1	3.32	SLP-152.1	3.32	✆		✆	
	without level switch	S-01	3.34	S-01	3.34	S-01	3.34	✆	
Suction aid / Siphon Vessel	**transparent PVC-U**	770.2	3.54	770.2	3.54	771.2	3.54	772.2	3.54
Calibration Pot	**PVC-U**	795.1	3.56	795.1	3.56	796.1	3.56	796.1	3.56
Foot valve	**PVC-U**	732.3	3.58	732.3	3.58	733.3	3.58	733.3	3.58
	PP / PVDF	732	3.60	732	3.60	733	3.60	733	3.60
	1.4571	732	3.60	732	3.60	733	3.60	733	3.60
	PP-FRP / PVDF-FRP	783.1	3.64	783.1	3.64	783.1	3.64	783.1	3.64
Line strainer	**PVC-U / PP / PVDF / 1.4408**	✆		✆		✆		✆	
Fittings for pressure side of dosing pumps		**C410.2-280e C410.2-280e**		**C410.2-510e C410.2-570e**		**C410.2-850e C410.2-900e**		**C410.2-1450e**	
		Type	p.	Type	p.	Type	p.	Type	p.
Diaphragm-type relief valve		622.10	3.4	622.10	3.4	623.10	3.4	624.10	3.4
Diaphragm-type pressure keeping valve		622.D	3.6	622.D	3.6	623.D	3.6	624.D	3.6
Pulsation damper without separating diaphragm	**PVC-U / PP / 1.4571**	✆		✆		✆		✆	
Diaphragm-pulsation damper with Elastomer-diaphragm	**PVC-U / PP / PVDF**	713.1	3.16	713.1	3.16	713.1	3.16	713.1	3.16
	1.4571	810.1-0,75/10	3.26	810.1-2,0/10	3.26	810.1-2,0/10	3.26	713.1	3.16
Diaphragm-pulsation damper with PTFE/PTFE-faced diaphragm	**PVC-U / PP / PVDF**	723.1	3.20	✆		✆		✆	
	1.4571	723.1	3.24	✆		✆		✆	
Check valve	**PP-FRP / PVDF-FRP**	✆		✆		✆		✆	
	1.4571	✆		✆		✆		✆	
Dosing valve	**PP-FRP / PVDF-FRP**	693.1	3.54	693.1	3.54	693.1	3.54	693.1	3.54
	1.4571	692.1	3.54	692.1	3.54	693.1	3.54	693.1	3.54
	PVC-U / PP / PVDF	682.1	3.58	682.1	3.58	683.1	3.58	684.1	3.58
Injection fitting	**PVC-U / PP / PVDF**	8062.1	3.58	8062.1	3.58	8063.1	3.58	8063.1	3.58

The above allocation considers the fittings which have to be used at least regarding their nominal width in order to ensure the safe and trouble-free operation of the respective pumps when feeding liquids which are resembling to water.

Absolutely note the max. admissible operating pressure of the fittings.

The use of fittings of a bigger nominal width is unproblematically possible in most cases.

When choosing the fittings note the installation instructions for dosing pumps or confer with **sera**

© 2015 **sera GmbH**
Subject to technical modifications.

C409.2-...ML in survey

- Multi-layer diaphragm technology
- Safe to run dry
- Leckage free
- Low maintenance
- Easy to use
- High dosing accuracy
- Flexible , Multifunctional
- PROFIBUS - DP - interface
- Manuel stroke length and stroke frequency adjustment
- Robust metallic housing

Infobox

Order information Page 2.42
Options/accessories Page 2.42
Fittings-allocation Page 2.45
Connecting pieces Chapter 4
Resistance chart Chapter 5
Installation examples Chapter 5

2

Functions and operating modes

- Manual operation
- Manual stroke frequency adjustment
- PROFIBUS DP-VO slave Interface
- External START/STOP
- Pulse operation / fractinator
- Cycle delay unit
- Analogue operation (0/4-20 mA)*
- Analogue operation standardization
- Charge manual / with timer*
- Speed control / Slow mode
- 3 LED's for status indication
- Multiline illuminated text display
- Menu - driven parameterization
- Flow indication
- Calibration
- 4 - key operation
- 2 digital outputs (PLC)*
- 1 digital input (PLC or contact signal)*
- 2 analogue / digital inputs (optionally reversible)*
- Programmable input- / output functions*
- Connection / evaluation 2-stage level monitoring
- Diaphragm monitoring
- Connection / evaluation flow monitoring
- Connection / evaluation flow metering
- Voltage 210 - 250 V, 50/60 Hz
- 2m connecting cable wih Euro-plug

- * inapplicable when supplied with PROFIBUS DP - interface

Technical data

Type	Nominal capacity 50/60 Hz		Nominal stroke frequency 50/60 Hz	Capacity per stroke	Admiss. counterpressure	
	l/h	gal/h	1/min	ml/stroke	bar	psi
C409.2-11ML	0 - 11	0 - 2,91	100	1,8	20	290
C409.2-17ML	0 - 17	0 - 4,49	150	1,8	20	290
C409.2-30ML	0 - 30	0 - 7,93	100	5	16	232
C409.2-45ML	0 - 45	0 - 11,89	150	5	16	232
C409.2-72ML	0 - 72	0 - 19,02	100	12	10	145
C409.2-110ML	0 - 110	0 - 29,06	150	12	8	116
C409.2-150ML	0 - 150	0 - 39,63	100	25	4	58
C409.2-220ML	0 - 220	0 - 58,12	150	24	3	43,5

- Note: The admissible counterpressure is 10 bar (145 psi) or lower when plastic pump bodies are used.

Type	Admiss. pressure at pump inlet		Max. suction height	Inlet/ Outlet nominal width	Max. stroke length		Motor output
	bar	psi	mWC	DN	mm	in	kW
C409.2-11ML	-0,3 / 0	-4,3 / 0	3	10	4	0,16	0,37
C409.2-17ML	-0,3 / 0	-4,3 / 0	3	10	4	0,16	0,37
C409.2-30ML	-0,3 / 0	-4,3 / 0	3	10	6	0,24	0,37
C409.2-45ML	-0,3 / 0	-4,3 / 0	3	10	6	0,24	0,37
C409.2-72ML	-0,3 / 0	-4,3 / 0	3	15	8	0,31	0,37
C409.2-110ML	-0,3 / 0	-4,3 / 0	3	15	8	0,31	0,37
C409.2-150ML	-0,3 / 0	-4,3 / 0	3	15	10	0,39	0,37
C409.2-220ML	-0,3 / 0	-4,3 / 0	3	15	10	0,39	0,37

© 2015 sera GmbH
Subject to technical modifications.

Dimensional drawing

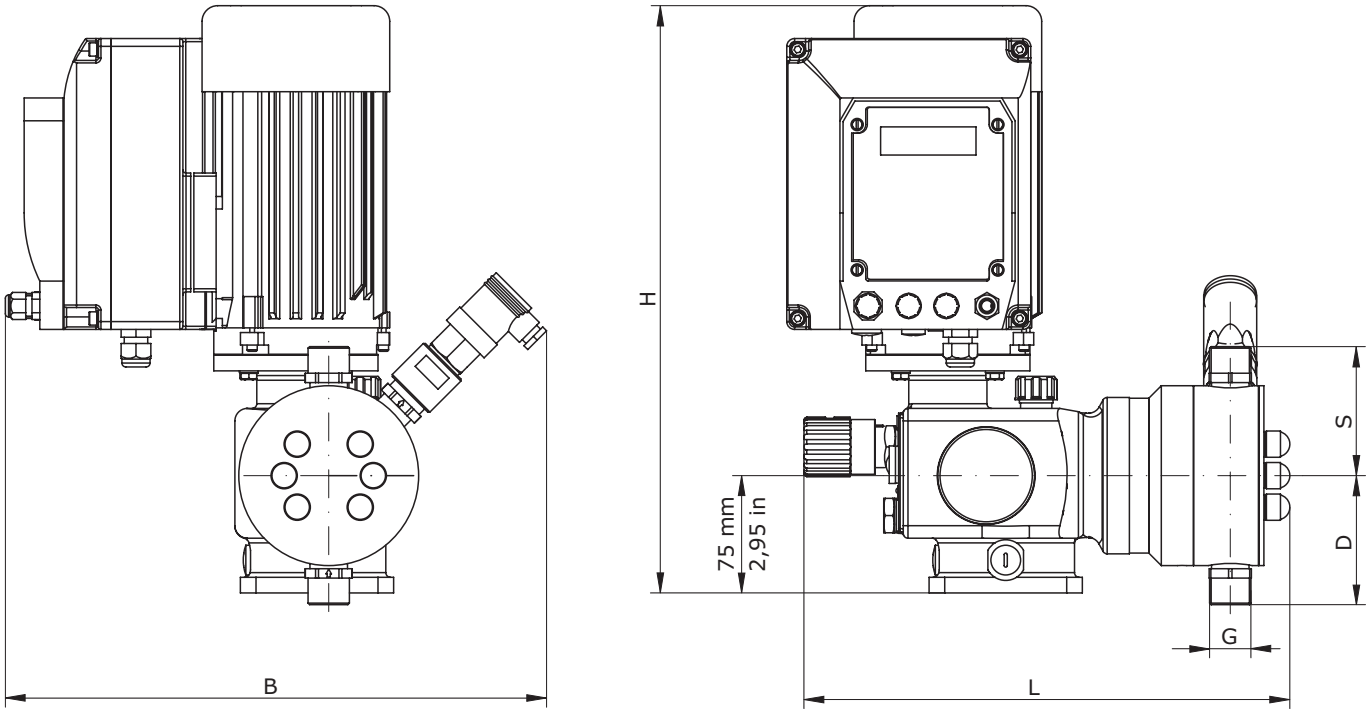

Dimensional chart

Indications in mm / inch

Type	G	S		D	
		mm	in	mm	in
C409.2-11ML	G 3/4	83	3,27	83	3,27
C409.2-17ML	G 3/4	83	3,27	83	3,27
C409.2-30ML	G 3/4	90	3,54	90	3,54
C409.2-45ML	G 3/4	90	3,54	90	3,54
C409.2-72ML	G 3/4	94	3,7	94	3,7
C409.2-110ML	G 3/4	94	3,7	94	3,7
C409.2-150ML	G 1 1/4	127	5	127	5
C409.2-220ML	G 1 1/4	127	5	127	5

Type	L		B		H		Weight
	mm	in	mm	in	mm	in	kg
C409.2-11ML	321	12,64	346	13,62	376	14,8	15,5
C409.2-17ML	321	12,64	346	13,62	376	14,8	15,5
C409.2-30ML	319	12,56	351	13,82	376	14,8	16
C409.2-45ML	319	12,56	351	13,82	376	14,8	16
C409.2-72ML	324	12,76	353	13,9	376	14,8	16,5
C409.2-110ML	324	12,76	353	13,9	376	14,8	16,5
C409.2-150ML	341	13,43	368	14,49	376	14,8	17,5
C409.2-220ML	341	13,43	368	14,49	376	14,8	17,5

■ Indication of weight for basic design acc. to order information

© 2015 **sera GmbH**
Subject to technical modifications.

Order information

Basic design

C409.2-11ML up to C409.2-45ML
- Pump body PP
- Double valves PP-FRP
- Valve balls PTFE
- Valve seals FPM
- Multi-layer diaphragm PTFE
- Pressure switch IP65
- 5m control cable 8-pole

C409.2-72ML up to C409.2-220ML
- Pump body PP
- Single valves PP-FRP
- Valve balls PTFE
- Valve seals FPM
- Multi-layer diaphragm PTFE
- Pressure switch IP65
- 5m control cable 8-pole

Motor:
- 210-250V 50/60 Hz, 1~, IP 55, ISO F

Further options and accessories:
- Connection pieces see chapter 4
- Product documentation see chapter 5

Type	Basic design		×
		Art.-no.	
C409.2-11ML		16017689	
C409.2-17ML		16021636	
C409.2-30ML		16019255	
C409.2-45ML		16020444	
C409.2-72ML		16016046	
C409.2-110ML		16017357	
C409.2-150ML		16019162	
C409.2-220ML		16020506	

Options/Accessories			C409.2-11ML C409.2-17ML	×	C409.2-30ML C409.2-45ML	×	C409.2-72ML C409.2-110ML	×	C409.2-150ML C409.2-220ML	×
Pump body and valves 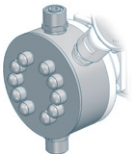	PP	single valves PP-FRP	–		–		●		●	
		double valves PP-FRP	●		●		–		–	
	PVC-U	single valves PVC-U	–		▲		▲		▲	
		chamber valves (double valves) PVC-U	▲		–		–		–	
	PVDF	single valves PVDF-FRP	–		–		▲		▲	
		double valves PVDF-FRP	▲		▲		–		–	
	1.4571	single valves 1.4571/1.4581	–		–		–		▲	
		double valves 1.4571/1.4581	▲		▲		▲		–	
Valve balls 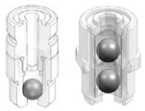	PTFE	single valves	–		❍		●		●	
		double valves	●		●		▲		–	
	1.4401	single valves	–		❍		❍		❍	
		double valves	❍		❍		❍		–	
Valve sealings	FPM	double valves	–		❍		●		●	
		single valves	●		●		❍		–	
	EPDM	double valves	–		❍		❍		❍	
		single valves	❍		❍		❍		–	
	FEP-covered	double valves	–		▲		▲		▲	
		single valves	▲		▲		▲		–	
Stroke length adjustment	with position indicator		▲		▲		▲		▲	
Stroke length adjustment electrical 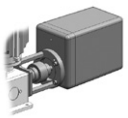	**Actuator N C1-BA** 230 V, +/- 10%, 50/60 Hz, 128s/10 U, 1,5 Nm incl. mounting plate for actuator		▲		▲		▲		▲	
	Electronic positioning controller PMR3 input signal 0/4-20 mA incl. feedback signal 0/4-20 mA (only in N C1-BA integrated)		▲		▲		▲		▲	

● = Basis design – = not available ▲ = with add. price ✆ = on request ❍ = without add. price Art.-No. = available in basic design/ accessories

© 2015 sera GmbH
Subject to technical modifications.

Order information

Basic design

C409.2-11ML up to C409.2-45ML
- Pump body PP
- Double valves PP-FRP
- Valve balls PTFE
- Valve seals FPM
- Multi-layer diaphragm PTFE
- Pressure switch IP65
- 5m control cable 8-pole

C409.2-72ML up to C409.2-220ML
- Pump body PP
- Single valves PP-FRP
- Valve balls PTFE
- Valve seals FPM
- Multi-layer diaphragm PTFE
- Pressure switch IP65
- 5m control cable 8-pole

Motor:
- 210-250V 50/60 Hz, 1~, IP 55, ISO F

Further options and accessories:
- Connection pieces see chapter 4
- Product documentation see chapter 5

Type	Basic design		×
		Art.-no.	
C409.2-11ML		16017689	
C409.2-17ML		16021636	
C409.2-30ML		16019255	
C409.2-45ML		16020444	
C409.2-72ML		16016046	
C409.2-110ML		16017357	
C409.2-150ML		16019162	
C409.2-220ML		16020506	

Options/Accessories		C409.2-11ML C409.2-17ML	×	C409.2-30ML C409.2-45ML	×	C409.2-72ML C409.2-110ML	×	C409.2-150ML C409.2-220ML	×
Profibus	Profibus-interface: **Profibus DP-V0 (slave)** Bit rate: **Automatic 9,6 kbit/s – 12 Mbit/s** Connection to dosing pump: **M12-cable box, 5-pole, B-coded**	▲		▲		▲		▲	
	Profibus Y-distributor M12x1, 5-pole, IP67	90025526		90025526		90025526		90025526	
	Profibus T-distributor M12x1, 5-pole, IP67	90022889		90022889		90022889		90022889	
	Profibus terminating resistor M12x1, 5-pole, IP67	90022890		90022890		90022890		90022890	
Control electronics	Remote-design, for wall mounting incl. 3m cable and fixing materials	▲		▲		▲		▲	
Control electronics	In design cTÜVus, Connection voltage 100V - 120V +/-5%, 60Hz, 2m cable with US-/ CDN-plug	▲		▲		▲		▲	
Drive motor	Connection voltage 115V / 50/60 Hz	✆		✆		✆		✆	
Flow controller	IP65 incl. cable 0,6m and cable bax M12 - 5-pole (bushing for pump connection) Material valve seals: FPM Thread connection 8191.1/8192.1: Input: G 3/4 (inlet), output: G 3/4 (outlet) Thread connection 8193.1: Input: G 1 (inlet), output: G 1 (outlet) max. pressure: 10 bar								
	8191.1 PVC-U/FPM	37602227		–		–		–	
	8191.1 PP/FPM	37602175		–		–		–	
	8192.1 PVC-U/FPM	–		37602176		37602176		–	
	8192.1 PP/FPM	–		37602177		37602177		–	
	8193.1 PVC-U/FPM	–		–		–		37602178	
	8193.1 PP/FPM	–		–		–		37602240	

● = Basis design – = not available ▲ = with add. price ✆ = on request ❍ = without add. price Art.-No. = available in basic design/ accessories

© 2015 **sera GmbH**
Subject to technical modifications.

Order information

Basic design

C409.2-11ML up to C409.2-45ML
- Pump body PP
- Double valves PP-FRP
- Valve balls PTFE
- Valve seals FPM
- Multi-layer diaphragm PTFE
- Pressure switch IP65
- 5m control cable 8-pole

C409.2-72ML up to C409.2-220ML
- Pump body PP
- Single valves PP-FRP
- Valve balls PTFE
- Valve seals FPM
- Multi-layer diaphragm PTFE
- Pressure switch IP65
- 5m control cable 8-pole

Motor:
- 210-250V 50/60 Hz, 1~, IP 55, ISO F

Further options and accessories:
- Connection pieces see chapter 4
- Product documentation see chapter 5

Type	Basic design		×
		Art.-no.	
C409.2-11ML		16017689	
C409.2-17ML		16021636	
C409.2-30ML		16019255	
C409.2-45ML		16020444	
C409.2-72ML		16016046	
C409.2-110ML		16017357	
C409.2-150ML		16019162	
C409.2-220ML		16020506	

Options/Accessories			C409.2-11ML C409.2-17ML ×	C409.2-30ML C409.2-45ML ×	C409.2-72ML C409.2-110ML ×	C409.2-150ML C409.2-220ML ×
Flow meter	IP65 incl. cable 0,6m and cable box M12 5-pole (bushing for pump connection) Connection 8012.1 - 8014.1: Inlet: G 3/4 (inside); Outlet G 3/4 (outside) Connection 8015.1: Inlet: G1 1/4 (inside); Outlet G1 1/4 (outside) Max. operating pressure: 10 bar					
	8012.1	PVC-U/FPM	37602277	–	–	–
		PVDF/FPM	37602307	–	–	–
	8013.1	PVC-U/FPM	–	37602279	–	–
		PVDF/FPM	–	37602309	–	–
	8014.1	PVC-U/FPM	–	–	37602281	–
		PVDF/FPM	–	–	37602311	–
	8015.1	PVC-U/FPM	–	–	–	37602320
		PVDF/FPM	–	–	–	37602332
	Seals made of EPDM		❍	❍	❍	❍
Control cable	M12 cable box 3-pole, 5 meter für level input (Level monitor not included)		90031245	90031245	90031245	90031245
	M12 cable box 3-pole, ready-made for level input (Level monitor not included)		90022877	90022877	90022877	90022877
Special connection	Special connection (plug) für power supply		✆	✆	✆	✆
Console 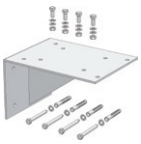	for wall mounting incl. fixing screws	1.4301	90023875	90023875	90023875	90023875
		PP	90023848	90023848	90023848	90023848

● = Basis design – = not available ▲ = with add. price ✆ = on request ❍ = without add. price Art.-No. = available in basic design/ accessories

© 2015 **sera GmbH**
Subject to technical modifications.

Fittings for suction side of dosing pumps		C409.2-11ML C409.2-17ML		C409.2-30ML C409.2-45ML		C409.2-72ML C409.2-110ML		C409.2-150ML		C409.2-220ML	
		Type	p.	Type	p.	Type	p.	Type	p.	Type	p.
Pulsation damper without separating diaphragm	**PVC-U / PP 1.4571**	✆		✆		✆		✆		✆	
Suction lance	**with level switch 1-stage**	SL-11.1	3.28	SL-02	3.30	SL-02	3.30	SL-02	3.30	SLP-151.1	3.32
	without level switch	S-01	3.34	S-01	3.34	S-01	3.34	S-01	3.34	S-01	3.34
	with level switch 2-stage	SL-12.1	3.28	SL-02	3.30	SL-02	3.30	SL-02	3.30	✆	
Suction aid / Siphon Vessel	**transparent PVC-U**	770.2	3.54	770.2	3.54	770.2	3.54	770.2	3.54	770.2	3.54
Calibration Pot	**PVC-U**	792.1	3.56	792.1	3.56	793.1	3.56	793.1	3.56	794.1	3.56
Foot valve	**PVC-U**	731	3.60	731	3.60	732.3	3.58	732.3	3.58	732.3	3.58
	PP / PVDF	✆		✆		✆		732	3.60	732	3.60
	1.4571	731	3.60	731	3.60	731	3.60	732	3.60	732	3.60
	PP-FRP / PVDF-FRP	781.1	3.64	781.1	3.64	781.1	3.64	✆		783.1	3.64
Line strainer	**PVC-U / PP / PVDF / 1.4408**	✆		✆		✆		✆		✆	

Fittings for pressure side of dosing pumps		C409.2-11ML C409.2-17ML		C409.2-30ML C409.2-45ML		C409.2-72ML C409.2-110ML		C409.2-150ML		C409.2-220ML	
		Type	p.	Type	p.	Type	p.	Type	p.	Type	p.
Diaphragm-type relief valve		620.10	3.4	620.10	3.4	622.10	3.4	622.10	3.4	622.10	3.4
Diaphragm-type pressure keeping valve		620.D	3.6	620.D	3.6	622.D	3.6	622.D	3.6	622.D	3.6
Multi-function valve	**4 bar opening pressure**	MFV 05004	3.8	–		–		–		–	
	6 bar opening pressure	MFV 05006	3.8	–		–		–		–	
	10 bar opening pressure	MFV 05010	3.8	–		–		–		–	
Pulsation damper without separating diaphragm	**PVC-U / PP 1.4571**	✆		✆		✆		✆		✆	
Diaphragm-pulsation damper with PTFE/PTFE-faced diaphragm	**PVC-U / PP / PVDF**	720.1	3.16	721.2	3.16	722.1	3.16	722.1	3.16	722.1	3.16
	1.4571	721.1	3.20	721.1	3.20	722.1	3.20	722.1	3.20	722.1	3.20
Diaphragm-pulsation damper with Elastomer-diaphragm	**1.4571**	810.1-0,16/...	3.22	810.1-0,16/...	3.22	810.1-0,32/...	3.22	810.1-0,32/...	3.22	810.1-0,75/...	3.22
Check valve	**PP-FRP / PVDF-FRP**	✆		✆		✆		✆		✆	
	PVC-U	✆		✆		✆		✆		✆	
	1.4571	✆		✆		✆		✆		✆	
Dosing valve	**PP-FRP / PVDF-FRP**	691.1	3.40	691.1	3.40	691.1	3.40	693.1	3.40	693.1	3.40
	1.4571	691.1	3.40	691.1	3.40	691.1	3.40	692.1	3.40	692.1	3.40
	PVC-U	691.1	3.40	691.1	3.40	691.1	3.40	–		–	
	PVC-U / PP / PVDF	681.1	3.44	681.1	3.44	681.1	3.44	682.1	3.44	682.1	3.44
Injection fitting	**PVC-U / PP / PVDF**	8061.1	3.46	8061.1	3.46	8061.1	3.46	8062.1	3.46	8062.1	3.46

The above allocation considers the fittings which have to be used at least regarding their nominal width in order to ensure the safe and trouble-free operation of the respective pumps when feeding liquids which are resembling to water.

Absolutely note the max. admissible operating pressure of the fittings.

The use of fittings of a bigger nominal width is unproblematically possible in most cases.

When choosing the fittings note the installation instructions for dosing pumps or confer with **sera.**

© 2015 **sera GmbH**
Subject to technical modifications.

C410.2-...ML in survey

- Multy-layer diaphragm technology
- Safe to run dry
- Leckage free
- Low maintenance
- Easy to use
- High dosing accuracy
- Flexible, Multifunctional
- PROFIBUS - DP - interface
- Manuel stroke length and stroke frequency adjustment
- Robust metallic housing

Infobox

Order information	Page 2.48
Options/accessories	Page 2.48
Fittings-allocation	Page 2.51
Connecting pieces	Chapter 4
Resistance chart	Chapter 5
Installation examples	Chapter 5

2

Functions and operating modes

- Manual operation
- Manual stroke frequency adjustment
- PROFIBUS DP-VO slave Interface
- External START/STOP
- Pulse operation / fractinator
- Cycle delay unit
- Analogue operation (0/4-20 mA)*
- Analogue operation standardization
- Charge manual / with timer*
- Speed control / Slow mode
- 3 LED's for status indication
- Multiline illuminated text display
- Menu - driven parameterization
- Flow indication
- Calibration
- 4 - key operation
- 2 digital outputs (PLC)*
- 1 digital input (PLC or contact signal)*
- 2 analogue / digital inputs (optionally reversible)*
- Programmable input- / output functions*
- Connection / evaluation 2-stage level monitoring
- Diaphragm monitoring
- Connection / evaluation flow monitoring
- Connection / evaluation flow metering

- * inapplicable when supplied with PROFIBUS DP - interface

Technical data

Type	Nominal capacity 50/60 Hz		Nominal stroke frequency 50/60 Hz	Capacity per stroke	Admiss. counterpressure	
	l/h	gal/h	1/min	ml/stroke	bar	psi
C410.2-70ML	0 - 70	0 - 18,49	97	12	16	232
C410.2-135ML	0 - 135	0 - 35,66	97	23	15	217,5
C410.2-500ML	0 - 500	0 - 132,09	97	85	10	145
C410.2-1200ML	0 - 1.200	0 - 317,01	97	206	5	72,5

- Note: The admissible counterpressure is 10 bar (145 psi) or lower when plastic pump bodies are used.

Type	Admiss. pressure at pump inlet		Max. suction height	Inlet/ Outlet nominal width	Max. stroke length		Motor output
	bar	psi	mWC	DN	mm	in	kW
C410.2-70ML	-0,3 / 0	-4,3 / 0	3	10	8	0,31	0,75
C410.2-135ML	-0,3 / 0	-4,3 / 0	3	15	10	0,39	0,75
C410.2-500ML	-0,3 / 0	-4,3 / 0	3	15	13	0,51	0,75
C410.2-1200ML	-0,3 / 0	-4,3 / 0	3	20	20	0,79	1,5

© 2015 sera GmbH
Subject to technical modifications.

Dimensional drawing

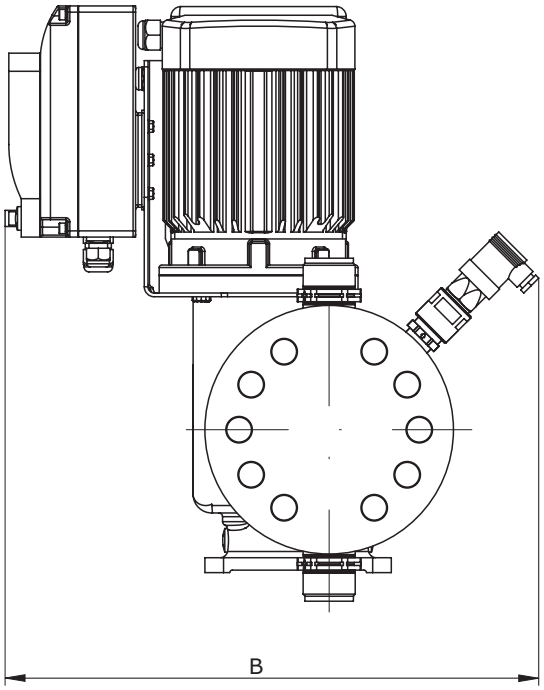

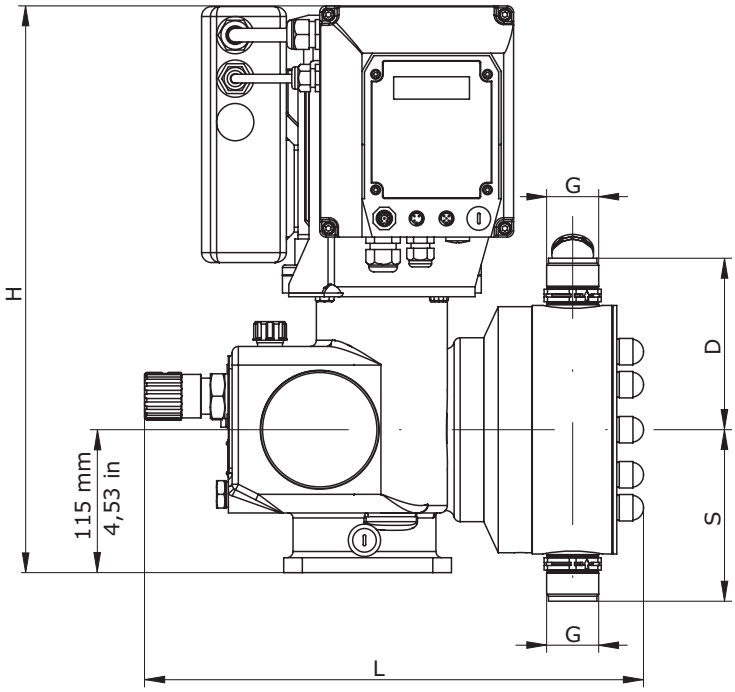

Dimensional chart

Indications in mm / inch

Type	G	S		D	
		mm	in	mm	in
C410.2-70ML	G 3/4	113	4,45	113	4,45
C410.2-135ML	G 1 1/4	127	5	127	5
C410.2-500ML	G 1 1/4	138	5,43	138	5,43
C410.2-1200ML	G 1 1/4	162	6,38	162	6,38

Type	L		B		H		Weight
	mm	in	mm	in	mm	in	kg
C410.2-70ML	408	16,06	387	15,24	450	17,72	40
C410.2-135ML	425	16,73	402	15,83	450	17,72	42
C410.2-500ML	413	16,26	409	16,1	490	19,29	45
C410.2-1200ML	457	17,99	425	16,73	490	19,29	47

■ Indication of weight for basic design acc. to order information

© 2015 **sera GmbH**
Subject to technical modifications.

Order information

Basic design

C410.2-...ML
- Pump body PP
- Single valves PP-FRP
- Valve balls PTFE
- Valve seals FPM
- Multi-layer diaphragm PTFE
- Pressure switch IP65
- 5m control cable 8-pole

Motor:
- 3~ 380-420V/N/PE, 50/60 Hz, IP 55, ISO F

Further options and accessories:
- Connection pieces see chapter 4
- Product documentation see chapter 5

Type	Basic design		x
		Art.-no.	
C410.2-70ML		16021640	
C410.2-135ML		16021641	
C410.2-500ML		16014597	
C410.2-1200ML		16021642	

2

Options/Accessories			C410.2-70ML	x	C410.2-135ML	x	C410.2-500ML	x	C410.2-1200ML	x
Pump body and valves 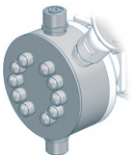	PP	single valves PP-FRP	●		●		●		●	
	PVC-U	single valves PVC-U	▲		▲		▲		▲	
	PVDF	single valves PVDF-FRP	▲		▲		▲		▲	
	1.4571	single valves 1.4571/1.4581	–		▲		▲		▲	
		double valves 1.4571/1.4581	▲		–		–		–	
Valve balls 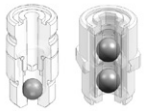	PTFE	single valves	●		●		●		●	
		double valves	▲		–		–		–	
	1.4401	single valves	❍		❍		❍		❍	
		double valves	❍		–		–		–	
Valve sealings	FPM	single valves	●		●		●		●	
		double valves	❍		–		–		–	
	EPDM	single valves	❍		❍		❍		❍	
		double valves	❍		–		–		–	
	FEP-covered	single valves	▲		▲		▲		▲	
		double valves	▲		–		–		–	
Stroke length adjustment	with position indicator		▲		▲		▲		▲	
Stroke length adjustment electrical 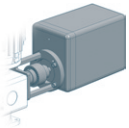	**Actuator N1S** 230 V, +/- 10%, 50/60 Hz, 128s/10 U, 15 Nm incl. mounting plate for actuator		▲		▲		▲		▲	
	Electronic positioning controller PMR3 input signal 0/4-20 mA incl. feedback signal 0/4-20 mA		▲		▲		▲		▲	

● = Basis design – = not available ▲ = with add. price ✆ = on request ❍ = without add. price Art.-No. = available in basic design/ accessories

© 2015 **sera GmbH**
Subject to technical modifications.

Order information

Basic design

C410.2-...ML

- Pump body PP
- Single valves PP-FRP
- Valve balls PTFE
- Valve seals FPM
- Multi-layer diaphragm PTFE
- Pressure switch IP65
- 5m control cable 8-pole

Motor:

- 3~ 380-420V/N/PE, 50/60 Hz, IP 55, ISO F

Further options and accessories:

- Connection pieces see chapter 4
- Product documentation see chapter 5

Type	Basic design		×
		Art.-no.	
C410.2-70ML		16021640	
C410.2-135ML		16021641	
C410.2-500ML		16014597	
C410.2-1200ML		16021642	

Options/Accessories		C410.2-70ML ×	C410.2-135ML ×	C410.2-500ML ×	C410.2-1200ML ×
Profibus	Profibus-interface: **Profibus DP-V0 (slave)** Bit rate: **Automatic 9,6 kbit/s – 12 Mbit/s** Connection to dosing pump: **M12-cable box, 5-pole, B-coded**	▲	▲	▲	▲
	Profibus Y-distributor M12x1, 5-pole, IP67	90025526	90025526	90025526	90025526
	Profibus T-distributor M12x1, 5-pole, IP67	90022889	90022889	90022889	90022889
	Profibus terminating resistor M12x1, 5-pole, IP67	90022890	90022890	90022890	90022890
Control electronics	Remote-design, for wall mounting incl. 3m cable and fixing materials	▲	▲	▲	▲
Flow meter	IP65 incl. cable 0,6m and cable box M12 5-pole (bushing for pump connection) Connection 8014.1: Inlet: G 3/4 (inside); Outlet G 3/4 (outside) Connection 8015.1 - 8017.1: Inlet: G1 1/4 (inside); Outlet G1 1/4 (outside) Max. operating pressure: 10 bar				
	8014.1 PVC-U/FPM	37602281	–	–	–
	8014.1 PVDF/FPM	37602311	–	–	–
	8015.1 PVC-U/FPM	–	37602320	–	–
	8015.1 PVDF/FPM	–	37602332	–	–
	8016.1 PVC-U/FPM	–	–	37602322	–
	8016.1 PVDF/FPM	–	–	✆	–
	8017.1 PVC-U/FPM	–	–	–	37602323
	8017.1 PVDF/FPM	–	–	–	37602335
Control cable	M12 cable box 3-pole, 5 meter für level input (Level monitor not included)	90031245	90031245	90031245	90031245
	M12 cable box 3-pole, ready-made for level input (Level monitor not included)	90022877	90022877	90022877	90022877

● = Basis design – = not available ▲ = with add. price ✆ = on request ❍ = without add. price Art.-No. = available in basic design/ accessories

© 2015 **sera GmbH**
Subject to technical modifications.

Order information

Basic design

C410.2-...ML

- Pump body PP
- Single valves PP-FRP
- Valve balls PTFE
- Valve seals FPM
- Multi-layer diaphragm PTFE
- Pressure switch IP65
- 5m control cable 8-pole

Motor:

- 3~ 380-420V/N/PE, 50/60 Hz, IP 55, ISO F

Further options and accessories:

- Connection pieces see chapter 4
- Product documentation see chapter 5

Type	Basic design		x
		Art.-no.	
C410.2-70ML		16021640	
C410.2-135ML		16021641	
C410.2-500ML		16014597	
C410.2-1200ML		16021642	

2

Options/Accessories		C410.2-70ML	x	C410.2-135ML	x	C410.2-500ML	x	C410.2-1200ML	x
Special connection Special connection (plug) für power supply		✆		✆		✆		✆	
Console 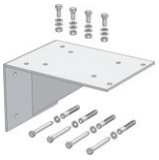 for wall mounting incl. fixing screws	1.4301	90023876		90023876		90023876		90023876	
	PP	90023849		90023849		90023849		90023849	

● = Basis design – = not available ▲ = with add. price ✆ = on request ❍ = without add. price Art.-No. = available in basic design/ accessories

© 2015 **sera GmbH**
Subject to technical modifications.

Fittings for suction side of dosing pumps		C410.2-70ML		C410.2-135ML		C410.2-500ML		C410.2-1200ML	
		Type	p.	Type	p.	Type	p.	Type	p.
Pulsation damper without separating diaphragm	**PVC-U / PP / 1.4571**	✆		✆		✆		✆	
Suction lance	**with level switch 1-stage**	SL-02	3.30	✆		SLP-151.1	3.32	–	
	without level switch	S-01	3.34	S-01	3.34	S-01	3.34	S-01	3.34
Suction aid / Siphon Vessel	**transparent PVC-U**	770.2	3.54	770.2	3.54	770.2	3.54	772.2	3.54
Calibration Pot	**PVC-U**	792.1	3.56	794.1	3.56	795.1	3.56	796.1	3.56
Foot valve	**PVC-U**	731	3.60	732.3	3.58	732.3	3.58	733.3	3.58
	PP / PVDF	–		732	3.60	732	3.60	733	3.60
	1.4571	731	3.60	732	3.60	732	3.60	733	3.60
	PP-FRP / PVDF-FRP	781.1	3.64	783.1	3.64	783.1	3.64	783.1	3.64
Line strainer	**PVC-U / PP / PVDF / 1.4408**	✆		✆		✆		✆	

Fittings for pressure side of dosing pumps		C410.2-70ML		C410.2-135ML		C410.2-500ML		C410.2-1200ML	
		Type	p.	Type	p.	Type	p.	Type	p.
Diaphragm-type relief valve		620.10	3.4	622.10	3.4	622.10	3.4	623.10	3.4
Diaphragm-type pressure keeping valve		620.D	3.6	622.D	3.6	622.D	3.6	623.D	3.6
Pulsation damper without separating diaphragm	**PVC-U / PP / 1.4571**	✆		✆		✆		✆	
Diaphragm-pulsation damper with PTFE/PTFE-faced diaphragm	**PVC-U / PP / PVDF**	721.2	3.16	722.1	3.16	✆		–	
	1.4571	721.1	3.20	722.1	3.20	✆		–	
Diaphragm-pulsation damper with Elastomer-diaphragm	**1.4571**	810.1-0,16/10	3.22	810.1-0,32/10	3.22	810.1-2,0/10	3.22	713.1	3.22
	PVC-U / PP / PVDF	✆		✆		713.1	3.14	713.1	3.14
Check valve	**PP-FRP / PVDF-FRP**	✆		✆		✆		✆	
	1.4571	✆		✆		✆		✆	
	PVC-U	✆		–		–		–	
Dosing valve	**PP-FRP / PVDF-FRP**	691.1	3.40	693.1	3.40	693.1	3.40	693.1	3.40
	1.4571	691.1	3.40	692.1	3.40	692.1	3.40	693.1	3.40
	PVC-U / PP / PVDF	681.1	3.44	682.1	3.44	682.1	3.44	684.1	3.44
	PVC-U	691.1	3.40	–		–		–	
Injection fitting	**PVC-U / PP / PVDF**	8061.1	3.46	8062.1	3.46	8062.1	3.46	8063.1	3.46

The above allocation considers the fittings which have to be used at least regarding their nominal width in order to ensure the safe and trouble-free operation of the respective pumps when feeding liquids which are resembling to water.
Absolutely note the max. admissible operating pressure of the fittings.
The use of fittings of a bigger nominal width is unproblematically possible in most cases.
When choosing the fittings note the installation instructions for dosing pumps or confer with **sera.**

© 2015 **sera GmbH**
Subject to technical modifications.

C409.2-...KM in survey

- Multi-layer diaphragm technology
- Safe to run dry
- Leckage free
- Low maintenance
- Easy to use
- High dosing accuracy
- Flexible, Multifunctional
- PROFIBUS - DP - interface
- Manuel stroke length and stroke frequency adjustment
- Robust metallic housing

Infobox

Order information Page 2.54
Options/accessories Page 2.54
Fittings-allocation Page 2.57
Connecting pieces Chapter 4
Resistance chart Chapter 5
Installation examples Chapter 5

2

Functions and operating modes

- Manual operation
- Manual stroke frequency adjustment
- PROFIBUS DP-VO slave Interface
- External START/STOP
- Pulse operation / fractinator
- Cycle delay unit
- Analogue operation (0/4-20 mA)*
- Analogue operation standardization
- Charge manual / with timer*
- Speed control / Slow mode
- 3 LED's for status indication
- Multiline illuminated text display
- Menu - driven parameterization
- Flow indication
- Calibration
- 4 - key operation
- 2 digital outputs (PLC)*
- 1 digital input (PLC or contact signal)*
- 2 analogue / digital inputs (optionally reversible)*
- Programmable input- / output functions*
- Connection / evaluation 2-stage level monitoring
- Diaphragm monitoring
- Connection / evaluation flow monitoring
- Connection / evaluation flow metering
- Voltage 210 - 250 V, 50/60 Hz
- 2m connecting cable wih Euro-plug

- * inapplicable when supplied with PROFIBUS DP - interface

Technical data

Type	Nominal capacity 50/60 Hz		Nominal stroke frequency 50/60 Hz	Capacity per stroke	Admiss. counterpressure	
	l/h	gal/h	1/min	ml/stroke	bar	psi
C409.2-7,5KM	0 - 7,5	0 - 1,98	100	1,25	80	1.160
C409.2-10KM	0 - 10	0 - 2,64	150	1,1	80	1.160
C409.2-12KM	0 - 12	0 - 3,17	100	2	70	1.015
C409.2-18KM	0 - 18	0 - 4,76	150	2	50	725
C409.2-30KM	0 - 30	0 - 7,93	100	5	35	507,5
C409.2-45KM	0 - 45	0 - 11,89	150	5	25	362,5
C409.2-70KM	0 - 70	0 - 18,49	100	11,6	20	290
C409.2-95KM	0 - 95	0 - 25,10	150	10,6	16	232
C409.2-135KM	0 - 135	0 - 35,66	100	22,5	10	145
C409.2-190KM	0 - 190	0 - 50,19	150	21,1	8	116

- Note: The admissible counterpressure is 10 bar (145 psi) when plastic pump bodies are used

Type	Admiss. pressure at pump inlet		Max. suction height	Inlet/ Outlet nominal width	Max. stroke length		Motor output
	bar	psi	mWC	DN	mm	in	kW
C409.2-7,5KM	-0,2 / 0	-2,9 / 0	2	10	10	0,39	0,37
C409.2-10KM	-0,2 / 0	-2,9 / 0	2	10	10	0,39	0,37
C409.2-12KM	-0,2 / 0	-2,9 / 0	2	10	10	0,39	0,37
C409.2-18KM	-0,2 / 0	-2,9 / 0	2	10	10	0,39	0,37
C409.2-30KM	-0,3 / 0	-4,3 / 0	3	10	10	0,39	0,37
C409.2-45KM	-0,3 / 0	-4,3 / 0	3	10	10	0,39	0,37
C409.2-70KM	-0,3 / 0	-4,3 / 0	3	10	10	0,39	0,37
C409.2-95KM	-0,3 / 0	-4,3 / 0	3	10	10	0,39	0,37
C409.2-135KM	-0,3 / 0	-4,3 / 0	3	10	10	0,39	0,37
C409.2-190KM	-0,3 / 0	-4,3 / 0	3	10	10	0,39	0,37

© 2015 sera GmbH
Subject to technical modifications.

Dimensional drawing

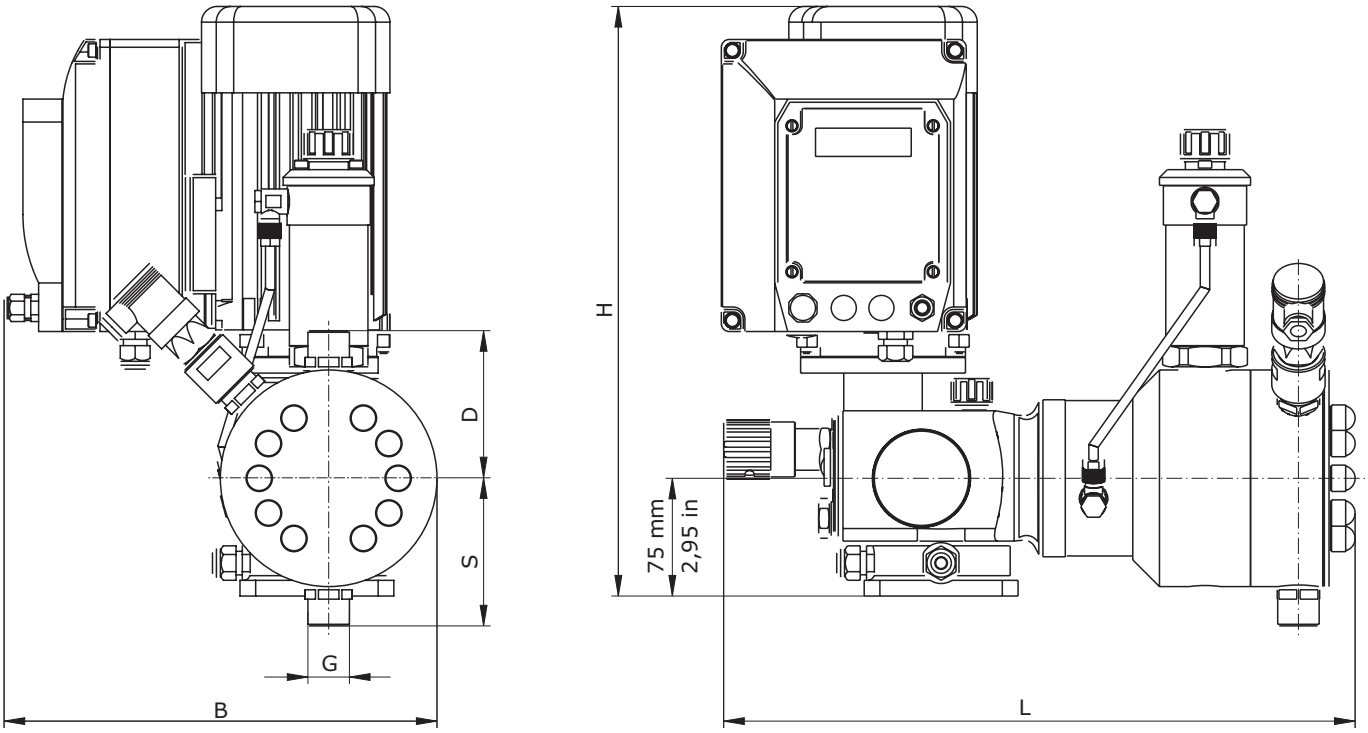

Dimensional chart

Indications in mm / inch

Type	G	S		D	
		mm	in	mm	in
C409.2-7,5KM	G 3/4	83	3,27	83	3,27
C409.2-10KM	G 3/4	83	3,27	83	3,27
C409.2-12KM	G 3/4	83	3,27	83	3,27
C409.2-18KM	G 3/4	83	3,27	83	3,27
C409.2-30KM	G 3/4	95	3,74	95	3,74
C409.2-45KM	G 3/4	95	3,74	95	3,74
C409.2-70KM	G 3/4	95	3,74	95	3,74
C409.2-95KM	G 3/4	95	3,74	95	3,74
C409.2-135KM	G 3/4	95	3,74	95	3,74
C409.2-190KM	G 3/4	95	3,74	95	3,74

Type	L		B		H		Weight
	mm	in	mm	in	mm	in	kg
C409.2-7,5KM	360	14,17	265	10,43	376	14,8	16,5
C409.2-10KM	360	14,17	265	10,43	376	14,8	16,5
C409.2-12KM	360	14,17	265	10,43	376	14,8	16,5
C409.2-18KM	360	14,17	265	10,43	376	14,8	16,5
C409.2-30KM	403	15,87	276	10,87	376	14,8	19,2
C409.2-45KM	403	15,87	276	10,87	376	14,8	19,2
C409.2-70KM	403	15,87	276	10,87	376	14,8	19,2
C409.2-95KM	403	15,87	276	10,87	376	14,8	19,2
C409.2-135KM	403	15,87	276	10,87	376	14,8	19,2
C409.2-190KM	403	15,87	276	10,87	376	14,8	19,2

■ Indication of weight for basic design acc. to order information

© 2015 **sera GmbH**
Subject to technical modifications.

Order information

Basic design

C409.2-7,5KM up to C409.2-45KM
- Pump body PP
- Double valves PP-FRP
- Valve balls PTFE
- Valve seals FPM
- Multi-layer diaphragm PTFE
- Pressure switch IP65
- 5m control cable 8-pole

C409.2-70KM up to C409.2-190KM
- Pump body PP
- Single valves PP-FRP
- Valve balls PTFE
- Valve seals FPM
- Multi-layer diaphragm PTFE
- Pressure switch IP65
- 5m control cable 8-pole

Motor:
- 210-250V 50/60 Hz, 1~, IP 55, ISO F

Further options and accessories:
- Connection pieces see chapter 4
- Product documentation see chapter 5

Type	Basic design		x
		Art.-no.	
C409.2-7,5KM		16017011	
C409.2-10KM		16021643	
C409.2-12KM		16021644	
C409.2-18KM		16016985	
C409.2-30KM		16021645	
C409.2-45KM		16021646	
C409.2-70KM		16021647	
C409.2-95KM		16021648	
C409.2-135KM		16021649	
C409.2-190KM		16021650	

Options/Accessories			C409.2-7,5KM up to C409.2-18KM	x	C409.2-30KM C409.2-45KM	x	C409.2-70KM C409.2-95KM	x	C409.2-135KM C409.2-190KM	x
Pump body and valves 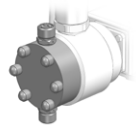	PP	single valves PP-FRP	–		–		●		●	
		double valves PP-FRP	●		●		–		–	
	PVC-U	single valves	–		▲		▲		▲	
		chamber valves (double valves)	▲		–		–		–	
	PVDF	single valves PVDF-FRP	–		–		▲		▲	
		double valves PVDF-FRP	▲		▲		▲		▲	
	1.4571	double valves 1.4571/1.4581	▲		▲		▲		▲	
Valve balls 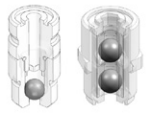	PTFE	single valves	–		❍		●		●	
		double valves	●		●		▲		▲	
	1.4401	single valves	–		❍		❍		❍	
		double valves	❍		❍		❍		❍	
Valve sealings	FPM	single valves	–		❍		●		●	
		double valves	●		●		❍		❍	
	EPDM	single valves	–		❍		❍		❍	
		double valves	❍		❍		❍		❍	
	FEP-covered	single valves	–		▲		▲		▲	
		double valves	▲		▲		▲		▲	
Stroke length adjustment	with position indicator		▲		▲		▲		▲	

● = Basis design – = not available ▲ = with add. price ✆ = on request ❍ = without add. price Art.-No. = available in basic design/ accessories

© 2015 **sera GmbH**
Subject to technical modifications.

Order information

Basic design

C409.2-7,5KM up to C409.2-45KM
- Pump body PP
- Double valves PP-FRP
- Valve balls PTFE
- Valve seals FPM
- Multi-layer diaphragm PTFE
- Pressure switch IP65
- 5m control cable 8-pole

C409.2-70KM up to C409.2-190KM
- Pump body PP
- Single valves PP-FRP
- Valve balls PTFE
- Valve seals FPM
- Multi-layer diaphragm PTFE
- Pressure switch IP65
- 5m control cable 8-pole

Motor:
- 210-250V 50/60 Hz, 1~, IP 55, ISO F

Further options and accessories:
- Connection pieces see chapter 4
- Product documentation see chapter 5

Type	Basic design		x
		Art.-no.	
C409.2-7,5KM		16017011	
C409.2-10KM		16021643	
C409.2-12KM		16021644	
C409.2-18KM		16016985	
C409.2-30KM		16021645	
C409.2-45KM		16021646	
C409.2-70KM		16021647	
C409.2-95KM		16021648	
C409.2-135KM		16021649	
C409.2-190KM		16021650	

Options/Accessories		C409.2-7,5KM up to C409.2-18KM	x	C409.2-30KM C409.2-45KM	x	C409.2-70KM C409.2-95KM	x	C409.2-135KM C409.2-190KM	x
Profibus	Profibus-interface: **Profibus DP-V0 (slave)** Bit rate: **Automatic 9,6 kbit/s – 12 Mbit/s** Connection to dosing pump: **M12-cable box, 5-pole, B-coded**	▲		▲		▲		▲	
	Profibus Y-distributor M12x1, 5-pole, IP67	90025526		90025526		90025526		90025526	
	Profibus T-distributor M12x1, 5-pole, IP67	90022889		90022889		90022889		90022889	
	Profibus terminating resistor M12x1, 5-pole, IP67	90022890		90022890		90022890		90022890	
Stroke length adjustment electrical	**Actuator N C1-BA** 230 V, +/- 10%, 50/60 Hz, 128s/10 U, 1,5 Nm incl. mounting plate for actuator	▲		▲		▲		▲	
	Electronic positioning controller PMR3 input signal 0/4-20 mA incl. feedback signal 0/4-20 mA (only in N C1-BA integrated)	▲		▲		▲		▲	
Drive motor	Connection voltage 115V / 50/60 Hz	✆		✆		✆		✆	
Control electronics	Remote-design, for wall mounting incl. 3m cable and fixing materials	▲		▲		▲		▲	
Flow controller	IP65 incl. cable 0,6m and cable bax M12 - 5-pole (bushing for pump connection) Material valve seals: FPM Thread connection: Input: G 3/4 (inlet), output: G 3/4 (outlet) max. pressure: 10 bar								
	8191.1 PVC-U/FPM	37602227		–		–		–	
	8191.1 PP/FPM	37602175		–		–		–	
	8192.1 PVC-U/FPM	–		37602176		37602176		37602176	
	8192.1 PP/FPM	–		37602177		37602177		37602177	

● = Basis design – = not available ▲ = with add. price ✆ = on request ❍ = without add. price Art.-No. = available in basic design/ accessories

© 2015 **sera GmbH**
Subject to technical modifications.

Order information

Basic design

C409.2-7,5KM up to C409.2-45KM
- Pump body PP
- Double valves PP-FRP
- Valve balls PTFE
- Valve seals FPM
- Multi-layer diaphragm PTFE
- Pressure switch IP65
- 5m control cable 8-pole

C409.2-70KM up to C409.2-190KM
- Pump body PP
- Single valves PP-FRP
- Valve balls PTFE
- Valve seals FPM
- Multi-layer diaphragm PTFE
- Pressure switch IP65
- 5m control cable 8-pole

Motor:
- 210-250V 50/60 Hz, 1~, IP 55, ISO F

Further options and accessories:
- Connection pieces see chapter 4
- Product documentation see chapter 5

Type	Basic design		x
		Art.-no.	
C409.2-7,5KM		16017011	
C409.2-10KM		16021643	
C409.2-12KM		16021644	
C409.2-18KM		16016985	
C409.2-30KM		16021645	
C409.2-45KM		16021646	
C409.2-70KM		16021647	
C409.2-95KM		16021648	
C409.2-135KM		16021649	
C409.2-190KM		16021650	

Options/Accessories			C409.2-7,5KM up to C409.2-18KM	x	C409.2-30KM C409.2-45KM	x	C409.2-70KM C409.2-95KM	x	C409.2-135KM C409.2-190KM	x
Flow meter	IP65 incl. cable 0,6m and cable box M12 5-pole (bushing for pump connection) Connection: Inlet: G 3/4 (inside); Outlet G 3/4 (outside) Max. operating pressure: 10 bar									
	8011.1	ECTFE/PP/FPM	37602343		–		–		–	
		ECTFE/PVC-U/FPM	37602345		–		–		–	
		ECTFE/PVDF/FPM	37602348		–		–		–	
	8012.1	PVC-U/FPM	–		37602277		–		–	
		PVDF/FPM	–		37602307		–		–	
	8013.1	PVC-U/FPM	–		–		37602279		–	
		PVDF/FPM	–		–		37602309		–	
	8014.1	PVC-U/FPM	–		–		–		37602281	
		PVDF/FPM	–		–		–		37602311	
Control cable	M12 cable box 3-pole, 5 meter für level input (Level monitor not included)		90031245		90031245		90031245		90031245	
	M12 cable box 3-pole, ready-made for level input (Level monitor not included)		90022877		90022877		90022877		90022877	
Special connection	Special connection (plug) für power supply		✆		✆		✆		✆	
Console 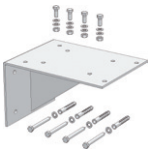	for wall mounting incl. fixing screws	1.4301	90023875		90023875		90023875		90023875	
		PP	90023848		90023848		90023848		90023848	

● = Basis design – = not available ▲ = with add. price ✆ = on request ❍ = without add. price Art.-No. = available in basic design/ accessories

© 2015 **sera GmbH**
Subject to technical modifications.

Fittings for suction side of dosing pumps		C409.2-7,5KM C409.2-10KM		C409.2-12KM C409.2-18KM		C409.2-30KM C409.2-45KM		C409.2-70KM C409.2-95KM		C409.2-135KM C409.2-190KM	
		Type	p.	Type	p.	Type	p.	Type	p.	Type	p.
Pulsation damper without separating diaphragm	**PVC-U / PP / 1.4571**	✆		✆		✆		✆		✆	
Suction lance	**with level switch 1-stage**	SL-11.1	3.28	SL-11.1	3.28	SL-02	3.30	SL-02	3.30	SL-02	3.30
	with level switch 2-stage	SL-12.1	3.28	SL-12.1	3.28	SL-02	3.30	SL-02	3.30	SL-02	3.30
	without level switch	S-01	3.34	S-01	3.34	S-01	3.34	S-01	3.34	S-01	3.34
Suction aid / Siphon Vessel	**transparent PVC-U**	770.2	3.54	770.2	3.54	770.2	3.54	770.2	3.54	770.2	3.54
Calibration Pot	**PVC-U**	791.1	3.56	792.1	3.56	792.1	3.56	793.1	3.56	794.1	3.56
Foot valve	**PVC-U**	731	3.60	731	3.60	731	3.60	731	3.60	731	3.60
	PP / PVDF	732	3.60	732	3.60	732	3.60	731	3.60	731	3.60
	1.4571	731	3.60	731	3.60	731	3.60	781.1	3.64	781.1	3.64
	PP-FRP / PVDF-FRP	781.1	3.64	781.1	3.64	781.1	3.64	751.1	3.64	751.1	3.64
Line strainer	**PVC-U / PP / PVDF / 1.4408**	✆		✆		✆		✆		✆	

Fittings for pressure side of dosing pumps		C409.2-7,5KM C409.2-10KM		C409.2-12KM C409.2-18KM		C409.2-30KM C409.2-45KM		C409.2-70KM C409.2-95KM		C409.2-135KM C409.2-190KM	
		Type	p.	Type	p.	Type	p.	Type	p.	Type	p.
Diaphragm-type relief valve		620.10	3.4	620.10	3.4	620.10	3.4	620.10	3.4	622.10	3.4
Diaphragm-type pressure keeping valve		620.D	3.6	620.D	3.6	620.D	3.6	620.D	3.6	622.D	3.6
Multi-function valve	**4 bar opening pressure**	MFV 05004	3.8	MFV 05004	3.8	MFV 05004	3.8	–		–	
	6 bar opening pressure	MFV 05006	3.8	MFV 05006	3.8	MFV 05006	3.8	–		–	
	10 bar opening pressure	MFV 05010	3.8	MFV 05010	3.8	MFV 05010	3.8	–		–	
Pulsation damper without separating diaphragm	**PVC-U / PP / 1.4571**	✆		✆		✆		✆		✆	
Diaphragm-pulsation damper with PTFE/PTFE-faced diaphragm	**PVC-U / PP / PVDF**	720.1	3.16	720.1	3.16	720.1	3.16	721.2	3.16	721.2	3.16
	1.4571	721.1	3.20	721.1	3.20	721.1	3.20	721.1	3.20	721.1	3.20
Diaphragm-pulsation damper with Elastomer-diaphragm	**1.4571**	810.1-0,16/...	3.22	810.1-0,16/...	3.22	810.1-0,16/...	3.22	810.1-0,32/...	3.22	810.1-0,32/...	3.22
Check valve	**PVC-U**	✆		✆		✆		✆		✆	
	PP-FRP / PVDF-FRP	✆		✆		✆		✆		✆	
	1.4571	✆		✆		✆		✆		✆	
Dosing valve	**PVC-U**	691.1	3.40	691.1	3.40	691.1	3.40	691.1	3.40	691.1	3.40
	PP-FRP / PVDF-FRP	691.1	3.40	691.1	3.40	691.1	3.40	691.1	3.40	691.1	3.40
	1.4571	691.1	3.40	691.1	3.40	691.1	3.40	691.1	3.40	691.1	3.40
	PVC-U / PP / PVDF	681.1	3.44	681.1	3.44	681.1	3.44	681.1	3.44	681.1	3.44
Injection fitting	**PVC-U / PP / PVDF**	8061.1	3.46	8061.1	3.46	8061.1	3.46	8061.1	3.46	8061.1	3.46

The above allocation considers the fittings which have to be used at least regarding their nominal width in order to ensure the safe and trouble-free operation of the respective pumps when feeding liquids which are resembling to water.
Absolutely note the max. admissible operating pressure of the fittings.
The use of fittings of a bigger nominal width is unproblematically possible in most cases.
When choosing the fittings note the installation instructions for dosing pumps or confer with **sera**

© 2015 **sera GmbH**
Subject to technical modifications.

© 2015 **sera GmbH**
Subject to technical modifications.

Dosing- and feeding pumps for heavy industrial operating conditions, Ex-zone		Series	Capacity	Counter-pressure	Page
	Diaphragm pumps	R409.2 R410.2	0,4 l/h ▼ 1450 l/h	10 bar ▲ 3 bar	2.60
	Multi-layer diaphragm pumps	R 409.2 - ML R 410.2 - ML	11 l/h ▼ 1200 l/h	20 bar ▲ 5 bar	2.76
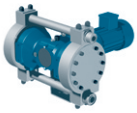	Diaphragm-feeding pumps	ZX... 411.3	2200 l/h ▼ 3100 l/h	4 bar	2.94
	Piston diaphragm pumps	R409.2-KM R410.2-KM	7,5 l/h ▼ 850 l/h	80 bar ▲ 8 bar	2.100
	Piston diaphragm pumps	R510.1-KM R511.1-KM	4,9 l/h ▼ 1740 l/h	300 bar ▲ 13 bar	2.112
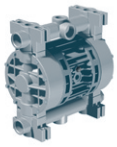	Air-driven Diaphragm pumps	APB - ... APE - ...	5,0 l/min. ▼ 850 l/min.	7,0 bar ▲ 0,5 bar	2.125

© 2015 **sera GmbH**
Subject to technical modifications.

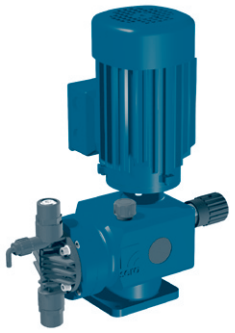

R409.2 in survey

- Safe to run dry
- Leakage free
- Low maintenance
- Easy to use
- High dosing accuracy
- Integrable into automatic processes
- Manual stroke length adjustment
- Robust metallic housing

Infobox

Order information	Page 2.62
Options/accessories	Page 2.62
Fittings-allocation	Page 2.66
Connecting pieces	Chapter 4
Resistance chart	Chapter 5
Installation examples	Chapter 5

Technical data

Type	Nominal capacity 50 Hz		Nominal capacity 60 Hz		Nominal stroke frequency		Capacity per stroke	Admissible Counterpressure	
	l/h	gal/h	l/h	gal/h	50 Hz 1/min	60 Hz 1/min	ml/stroke	bar	psi
R409.2-0,4e	0 - 0,4	0 - 0,11	0 - 0,48	0 - 0,12	50	60	0,13	10	145
R409.2-0,8e	0 - 0,8	0 - 0,21	0 - 0,96	0 - 0,25	100	120	0,13	10	145
R409.2-1,6e	0 - 1,6	0 - 0,42	0 - 1,9	0 - 0,49	100	120	0,27	10	145
R409.2-2,4e	0 - 2,4	0 - 0,63	0 - 2,9	0 - 0,75	150	180	0,27	10	145
R409.2-4,0e	0 - 4	0 - 1,06	0 - 4,8	0 - 1,24	100	120	0,67	10	145
R409.2-7,0e	0 - 7	0 - 1,85	0 - 8,4	0 - 2,17	150	180	0,78	10	145
R409.2-12e	0 - 12	0 - 3,17	0 - 14,4	0 - 3,72	67	80	3	10	145

Type	Admissible pressure at pump inlet		Max. Suction height	Inlet/ Outlet nominal width	Max. Stroke length		Motor output
	bar	psi	mWC	DN	mm	in	kW
R409.2-0,4e	-0,2 / 0	-2,9 / 0	2	4	1,6	0,06	0,18
R409.2-0,8e	-0,2 / 0	-2,9 / 0	2	5	1,6	0,06	0,18
R409.2-1,6e	-0,3 / 0	-4,3 / 0	3	5	1,6	0,06	0,18
R409.2-2,4e	-0,3 / 0	-4,3 / 0	3	5	1,6	0,06	0,18
R409.2-4,0e	-0,3 / 0	-4,3 / 0	3	5	4	0,16	0,18
R409.2-7,0e	-0,3 / 0	-4,3 / 0	3	5	4	0,16	0,18
R409.2-12e	-0,3 / 0	-4,3 / 0	3	10	6	0,24	0,18

© 2015 **sera GmbH**
Subject to technical modifications.

Dimensional drawing

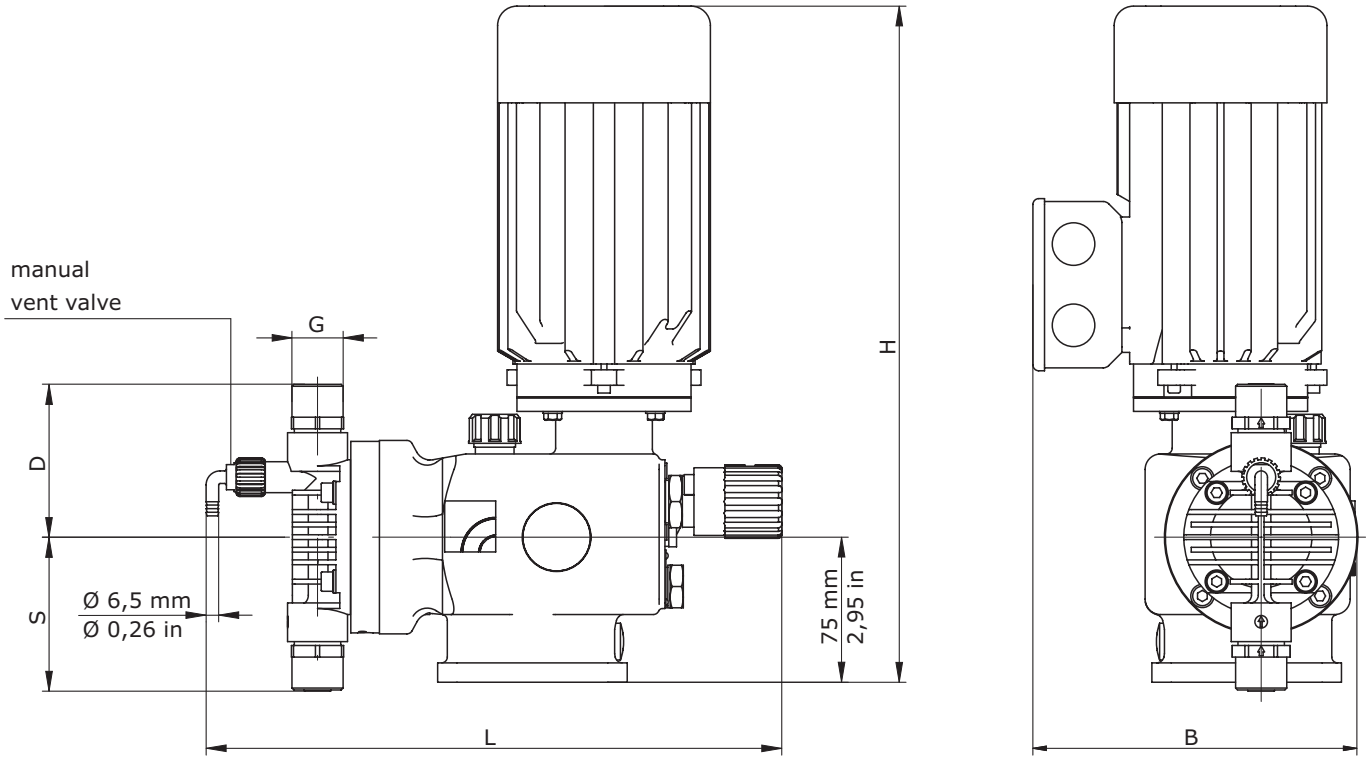

Dimensional chart

Indications in mm / inch

Type	G	S		D	
		mm	in	mm	in
R409.2-0,4e	G 3/4	70	2,76	70	2,76
R409.2-0,8e	G 3/4	80	3,15	80	3,15
R409.2-1,6e	G 3/4	80	3,15	80	3,15
R409.2-2,4e	G 3/4	80	3,15	80	3,15
R409.2-4,0e	G 3/4	56	2,2	64	2,52
R409.2-7,0e	G 3/4	56	2,2	64	2,52
R409.2-12e	G 3/4	56	2,2	64	2,52

Type	L		B		H		Weight
	mm	in	mm	in	mm	in	kg
R409.2-0,4e	270	10,63	190	7,48	380	14,96	8,6
R409.2-0,8e	310	12,2	190	7,48	380	14,96	8,6
R409.2-1,6e	310	12,2	190	7,48	380	14,96	8,6
R409.2-2,4e	310	12,2	190	7,48	380	14,96	8,6
R409.2-4,0e	270	10,63	190	7,48	380	14,96	8,6
R409.2-7,0e	270	10,63	190	7,48	380	14,96	8,6
R409.2-12e	270	10,63	190	7,48	380	14,96	8,6

- Manual vent valve only with PP-FRP and PVDF-FRP design at pumps with a nominal capacity from 0,8l/h up to 2,4l/h
- Indication of weight acc. to order information

© 2015 **sera GmbH**
Subject to technical modifications.

Order information

Basic design

R409.2-0,4e
- Pump body PP
- Chamber valves PP
- Valve balls PTFE
- Valve sealings FPM
- Working diaphragm PTFE-faced

R409.2-0,8e up to R409.2-2,4e
- Pump body PP-FRP
- Double valves PP-FRP
- Valve balls PTFE
- Valve sealings FPM
- Working diaphragm PTFE-faced
- Manual vent valve with hose nozzle (only with pump body made of PP-FRP/PVDF-FRP)

R409.2-4,0e up to R409.2-12e
- Pump body PP-FRP
- Double valves PP-FRP
- Valve balls PTFE
- Valve sealings FPM
- Working diaphragm PTFE-faced

Motor:
- 230/400 V +/- 5% 50 Hz threephase, 460 V star +/- 5% 60 Hz threephase, IP 55, insul. cl. F

More options and accessories:
- Connection pieces see chapter 4
- Product documentation see chapter 5

Type	Basic design		×
		Art.-no.	
R409.2-0,4e		16021610	
R409.2-0,8e		16021611	
R409.2-1,6e		16017156	
R409.2-2,4e		16018401	
R409.2-4,0e		16011914	
R409.2-7,0e		16011478	
R409.2-12e		16009680	

Options/Accessories			R409.2-0,4e	×	R409.2-0,8e up to R409.2-2,4e	×	R409.2-4,0e R409.2-7,0e	×	R409.2-12e	×
Pump body and valves	PP-FRP	double valves PP-FRP	–		●		●		●	
	PP	chamber valves (double valves) PP	●		–		–		–	
	PVC-U	single valves PVC-U	–		–		▲		▲	
		chamber valves (double valves) PVC-U	▲		▲		–		–	
	PVDF	Chamber valves (double valves) PVDF	✆		–		–		–	
	PVDF-FRP	double valves PVDF-FRP	–		▲		▲		▲	
	1.4571	chamber valves (double valves) 1.4571	▲		▲		–		–	
		double valves 1.4571/1.4581	–		–		▲		▲	
Valve balls 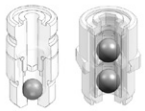	PTFE	single valves	–		–		❍		❍	
		double valves	●		●		●		●	
	1.4401	single valves	–		–		❍		❍	
		double valves	❍		❍		❍		❍	
Valve sealings	FPM	single valves	–		–		❍		❍	
		double valves	●		●		●		●	
	EPDM	single valves	–		–		❍		❍	
		double valves	❍		❍		❍		❍	
	FEP-covered	single valves	–		–		▲		▲	
		double valves	▲		▲		▲		▲	
	■ The option FEP-coverd valve sealings at the pump body designs made of PP-FRP or PVDF-FRP up to 2,4 l/h is only available on request.									
Intergrated relief valve 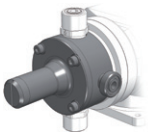	with PTFE-faced diaphragm, connection seal FPM or EPDM at pump body made of:									
	PP		–		–		▲		▲	
	PVC-U		–		–		▲		▲	
	PVDF		–		–		✆		✆	
	1.4571		–		–		▲		▲	
	Connection seals FEP-covered		–		–		▲		▲	

● = Basis design – = not available ▲ = with add. price ✆ = on request ❍ = without add. price Art.-No. = available in basic design/ accessories

© 2015 sera GmbH
Subject to technical modifications.

Order information

Basic design

R409.2-0,4e
- Pump body PP
- Chamber valves PP
- Valve balls PTFE
- Valve sealings FPM
- Working diaphragm PTFE-faced

R409.2-0,8e up to R409.2-2,4e
- Pump body PP-FRP
- Double valves PP-FRP
- Valve balls PTFE
- Valve sealings FPM
- Working diaphragm PTFE-faced
- Manual vent valve with hose nozzle (only with pump body made of PP-FRP/PVDF-FRP)

R409.2-4,0e up to R409.2-12e
- Pump body PP-FRP
- Double valves PP-FRP
- Valve balls PTFE
- Valve sealings FPM
- Working diaphragm PTFE-faced

Motor:
- 230/400 V +/- 5% 50 Hz threephase, 460 V star +/- 5% 60 Hz threephase, IP 55, insul. cl. F

More options and accessories:
- Connection pieces see chapter 4
- Product documentation see chapter 5

Type	Basic design	×
	Art.-no.	
R409.2-0,4e	16021610	
R409.2-0,8e	16021611	
R409.2-1,6e	16017156	
R409.2-2,4e	16018401	
R409.2-4,0e	16011914	
R409.2-7,0e	16011478	
R409.2-12e	16009680	

2

Options/Accessories			R409.2-0,4e ×	R409.2-0,8e up to R409.2-2,4e ×	R409.2-4,0e R409.2-7,0e ×	R409.2-12e ×
Diaphragm monitoring	Diaphragm rupture electrode conductive, mounted to pump					
	MBE-02		▲	▲	▲	▲
Diaphragm monitoring	Electrode relay, control cabinet assembly					
	ER-104	aux. energy 230 V AC	90022944	90022944	90022944	90022944
		aux. energy 24 V DC	90022945	90022945	90022945	90022945
	ER-142	aux. energy 230 V AC II(1)G [EExia] IIC acc. to ATEX 95	90200363	90200363	90200363	90200363
Stroke length adjustment	with position indicator		▲	▲	▲	▲
Stroke frequency monitoring	Inductive contact					
	10-60 V DC, three-wire, PNP		▲	▲	▲	▲
	Namur execution, II2G EExia IICT6 acc. to ATEX95		▲	▲	▲	▲

● = Basis design – = not available ▲ = with add. price ✆ = on request ❍ = without add. price Art.-No. = available in basic design/ accessories

© 2015 **sera GmbH**
Subject to technical modifications.

Order information

Basic design

R409.2-0,4e
- Pump body PP
- Chamber valves PP
- Valve balls PTFE
- Valve sealings FPM
- Working diaphragm PTFE-faced

R409.2-0,8e up to R409.2-2,4e
- Pump body PP-FRP
- Double valves PP-FRP
- Valve balls PTFE
- Valve sealings FPM
- Working diaphragm PTFE-faced
- Manual vent valve with hose nozzle (only with pump body made of PP-FRP/PVDF-FRP)

R409.2-4,0e up to R409.2-12e
- Pump body PP-FRP
- Double valves PP-FRP
- Valve balls PTFE
- Valve sealings FPM
- Working diaphragm PTFE-faced

Motor:
- 230/400 V +/- 5% 50 Hz threephase, 460 V star +/- 5% 60 Hz threephase, IP 55, insul. cl. F

More options and accessories:
- Connection pieces see chapter 4
- Product documentation see chapter 5

Type	Basic design		×
		Art.-no.	
R409.2-0,4e		16021610	
R409.2-0,8e		16021611	
R409.2-1,6e		16017156	
R409.2-2,4e		16018401	
R409.2-4,0e		16011914	
R409.2-7,0e		16011478	
R409.2-12e		16009680	

Options/Accessories		R409.2-0,4e	×	R409.2-0,8e up to R409.2-2,4e	×	R409.2-4,0e R409.2-7,0e	×	R409.2-12e	×
Drive motor	Add. price for special drive	▲		▲		▲		▲	
	Special voltage	✆		✆		✆		✆	
	Enclosure IP 65	▲		▲		▲		▲	
	Protective roof for the fan of the drive	▲		▲		▲		▲	
	VIK-design	✆		✆		✆		✆	
	II2G EExe IIT4 (acc. to ATEX95)	▲		▲		▲		▲	
	Single phase AC 230V / 50 Hz with capacitor	▲		▲		▲		▲	
	electrical acc. to uL / CSA	✆		✆		✆		✆	
	Driver for converter operation incl. integrated posistor, 5-50/60Hz	▲		▲		▲		▲	
	Driver for converter operation II2G EExde IICT4, 5-50 Hz acc. ATEX95, incl. integrated posistor	▲		▲		▲		▲	
	■ Please note: If one or several options ‚drive motor' are required to fix the add. price of the drive, the calculation will be as follows: ‚add. price special drive' plus the single options of the drive ■ Additional price and availability must be requested from **sera**								
Stroke length adjustment electrical 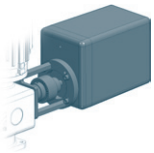	**Actuator N-AS10** 230V, +/- 10%, 50/60 Hz, 51,2s/4U, 2 Nm incl. mounting plate for actuator	▲		▲		–		–	
	Actuator N C1-BA 230 V, +/- 10%, 50/60 Hz, 128s/10 U, 1,5 Nm incl. mounting plate for actuator	–		–		▲		▲	
	Electronic positioning controller PMR3 input signal 0/4-20 mA incl. feedback signal 0/4-20 mA (only in N-AS 10 integrated)	▲		▲		–		–	
	Electronic positioning controller PMR3 input signal 0/4-20 mA incl. feedback signal 0/4-20 mA (only in N C1-BA integrated)	–		–		▲		▲	
	Actuator D30D-10-Ex (II2G EExde IICT4) acc. to ATEX 95, 400 V, 50 Hz, 4 U/min, incl. mounting-kit for actuator and base plate	▲		▲		–		–	
	Actuator D30D-10-Ex (II2G EExde IICT4) acc. to ATEX 95, 400 V, 50 Hz, 10 U/min, incl. mounting-kit for actuator and base plate	–		–		▲		▲	
	uL / CSA - design	✆		✆		✆		✆	

● = Basis design – = not available ▲ = with add. price ✆ = on request ❍ = without add. price Art.-No. = available in basic design/ accessories

© 2015 **sera GmbH**
Subject to technical modifications.

Order information

Basic design

R409.2-0,4e
- Pump body PP
- Chamber valves PP
- Valve balls PTFE
- Valve sealings FPM
- Working diaphragm PTFE-faced

R409.2-0,8e up to R409.2-2,4e
- Pump body PP-FRP
- Double valves PP-FRP
- Valve balls PTFE
- Valve sealings FPM
- Working diaphragm PTFE-faced
- Manual vent valve with hose nozzle (only with pump body made of PP-FRP/PVDF-FRP)

R409.2-4,0e up to R409.2-12e
- Pump body PP-FRP
- Double valves PP-FRP
- Valve balls PTFE
- Valve sealings FPM
- Working diaphragm PTFE-faced

Motor:
- 230/400 V +/- 5% 50 Hz threephase, 460 V star +/- 5% 60 Hz threephase, IP 55, insul. cl. F

More options and accessories:
- Connection pieces see chapter 4
- Product documentation see chapter 5

Type	Basic design		×
	Price (EUR)	Art.-no.	
R409.2-0,4e		16021610	
R409.2-0,8e		16021611	
R409.2-1,6e		16017156	
R409.2-2,4e		16018401	
R409.2-4,0e		16011914	
R409.2-7,0e		16011478	
R409.2-12e		16009680	

Options/Accessories			R409.2-0,4e ×	R409.2-0,8e up to R409.2-2,4e ×	R409.2-4,0e R409.2-7,0e ×	R409.2-12e ×
Stroke frequency adjustment electrical 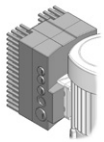	Frequency converter series INVEOR mounted-on, input 4-20mA					
	Single-phase 200-230 V, +/- 10%, 50/60 Hz	0,37 kW	▲	▲	▲	▲
	Three-phase 400-480 V, +/- 10%, 50/60 Hz	0,55 kW	▲	▲	▲	▲
	Service module MMI incl. connection cable		90039445	90039445	90039445	90039445
Stroke frequency adjustment electrical	Frequency converter series 8200 Vector input 4-20mA, incl. Keypad (for integration into control cabinet)					
	Single-phase 230 V, 50/60 Hz	0,25 kW	90017521	90017521	90017521	90017521
	Three-phase 320-550 V, +/- 0%, 50/60 Hz	0,55 kW	90017526	90017526	90017526	90017526
Console 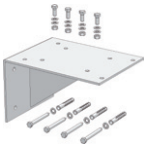	for wall mounting incl. fixing screws	1.4301	90023875	90023875	90023875	90023875
		PP	90023848	90023848	90023848	90023848

● = Basis design – = not available ▲ = with add. price ✆ = on request ❍ = without add. price Art.-No. = available in basic design/ accessories

© 2015 **sera GmbH**
Subject to technical modifications.

Fittings for suction side of dosing pumps		R409.2-0,4e up to R409.2-2,4e		R409.2-4,0e R409.2-7,0e		R409.2-12e	
		Type	p.	Type	p.	Type	p.
Pulsation damper without separating diaphragm	**PVC-U / PP / 1.4571**	✆		✆		✆	
Suction lance	**with level switch 1-stage**	SL-11.1	3.28	SL-11.1	3.28	SL-11.1	3.28
	with level switch 2-stage	SL-12.1	3.28	SL-12.1	3.28	SL-12.1	3.28
	without level switch	S-01	3.34	S-01	3.34	S-01	3.34
Priming aid	**transparent PVC-U**	769.1	3.52	769.1	3.52	769.1	3.52
Calibration Pot	**PVC-U**	791.1	3.56	791.1	3.56	792.1	3.56
Foot valve	**PVC-U**	731	3.58	731	3.58	731	3.58
	1.4571	731	3.58	731	3.58	731	3.58
	PP-FRP / PVDF-FRP	781.1	3.62	781.1	3.62	781.1	3.62
Line strainer	**PVC-U / PP / PVDF / 1.4408**	✆		✆		✆	

Fittings for pressure side of dosing pumps		R409.2-0,4e up to R409.2-2,4e		R409.2-4,0e R409.2-7,0e		R409.2-12e	
		Type	p.	Type	p.	Type	p.
Diaphragm-type relief valve		620.10	3.4	620.10	3.4	620.10	3.4
Diaphragm-type pressure keeping valve		620.D	3.6	620.D	3.6	620.D	3.6
Multi-function valve	**4 bar opening pressure**	MFV 05004	3.8	MFV 05004	3.8	MFV 05004	3.8
	6 bar opening pressure	MFV 05006	3.8	MFV 05006	3.8	MFV 05006	3.8
	10 bar opening pressure	MFV 05010	3.8	MFV 05010	3.8	MFV 05010	3.8
Pulsation damper without separating diaphragm	**PVC-U / PP / 1.4571**	✆		✆		✆	
Diaphragm-pulsation damper with PTFE/PTFE-faced diaphragm	**PVC-U / PP / PVDF**	720.1	3.16	720.1	3.16	720.1	3.16
	1.4571	721.1	3.20	721.1	3.20	721.1	3.20
Diaphragm-pulsation damper with Elastomer-diaphragm	**1.4571**	810.1-0,16/10	3.22	810.1-0,16/10	3.22	810.1-0,16/10	3.22
Check valve	**PVC-U / PP-FRP / PVDF-FRP**	✆		✆		✆	
	1.4571	✆		✆		✆	
Dosing valve	**PVC-U**	691.1	3.40	691.1	3.40	691.1	3.40
	PP-FRP / PVDF-FRP	691.1	3.40	691.1	3.40	691.1	3.40
	1.4571	691.1	3.40	691.1	3.40	691.1	3.40
	PVC-U / PP / PVDF	681.1	3.44	681.1	3.44	681.1	3.44
Injection fitting	**PVC-U / PP / PVDF**	8061.1	3.46	8061.1	3.46	8061.1	3.46

The above allocation considers the fittings which have to be used at least regarding their nominal width in order to ensure the safe and trouble-free operation of the respective pumps when feeding liquids which are resembling to water.

Absolutely note the max. admissible operating pressure of the fittings.

The use of fittings of a bigger nominal width is unproblematically possible in most cases.

When choosing the fittings note the installation instructions for dosing pumps or confer with **sera**

© 2015 **sera GmbH**
Subject to technical modifications.

© 2015 **sera GmbH**
Subject to technical modifications.

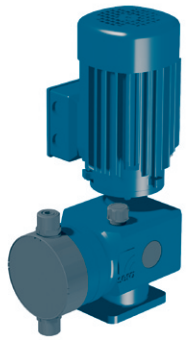

R409.2 in survey

- Safe to run dry
- Leakage free
- Low maintenance
- Easy to use
- High dosing accuracy
- Integrable into automatic processes
- Manual stroke length adjustment
- Robust metallic housing

Infobox

Order information Page 2.70
Options/accessories Page 2.70
Fittings-allocation Page 2.74
Connecting pieces Chapter 4
Resistance chart Chapter 5
Installation examples Chapter 5

2

Technical data

Type	Nominal capacity 50 Hz l/h	Nominal capacity 50 Hz gal/h	Nominal capacity 60 Hz l/h	Nominal capacity 60 Hz gal/h	Nominal stroke frequency 50 Hz 1/min	Nominal stroke frequency 60 Hz 1/min	Capacity per stroke ml/stroke	Admissible Counterpressure bar	Admissible Counterpressure psi
R409.2-18e	0 - 18	0 - 4,76	0 - 21,5	0 - 5,68	100	120	3	10	145
R409.2-25e	0 - 25	0 - 6,60	0 - 30	0 - 7,93	150	180	3	10	145
R409.2-50e	0 - 50	0 - 13,21	0 - 60	0 - 15,85	100	120	8,3	10	145
R409.2-75e	0 - 75	0 - 19,81	0 - 90	0 - 23,78	150	180	8,3	10	145
R409.2-90e	0 - 90	0 - 23,78	0 - 108	0 - 28,53	100	120	15	8	116
R409.2-115e	0 - 115	0 - 30,38	0 - 138	0 - 36,46	100	120	19,8	4	58
R409.2-140e	0 - 140	0 - 36,98	0 - 168	0 - 44,38	150	180	15	8	116
R409.2-180e	0 - 180	0 - 47,55	0 - 216	0 - 57,06	150	180	19,8	4	58
R409.2-250e	0 - 250	0 - 66,04	0 - 300	0 - 79,25	100	120	38,8	3	43,5
R409.2-350e	0 - 350	0 - 92,46	–	–	150	–	38,8	3	43,5

Type	Admissible pressure at pump inlet bar	Admissible pressure at pump inlet psi	Max. Suction height mWC	Inlet/ Outlet nominal width DN	Max. Stroke length mm	Max. Stroke length in	Motor output kW
R409.2-18e	-0,3 / 0	-4,3 / 0	3	10	6	0,24	0,18
R409.2-25e	-0,3 / 0	-4,3 / 0	3	10	6	0,24	0,18
R409.2-50e	-0,3 / 0	-4,3 / 0	3	10	8	0,31	0,18
R409.2-75e	-0,3 / 0	-4,3 / 0	3	15	8	0,31	0,18
R409.2-90e	-0,3 / 0	-4,3 / 0	3	15	10	0,39	0,37
R409.2-115e	-0,3 / 0	-4,3 / 0	3	15	10	0,39	0,18
R409.2-140e	-0,3 / 0	-4,3 / 0	3	15	10	0,39	0,37
R409.2-180e	-0,3 / 0	-4,3 / 0	3	15	10	0,39	0,18
R409.2-250e	-0,3 / 0	-4,3 / 0	3	15	10	0,39	0,37
R409.2-350e	-0,3 / 0	-4,3 / 0	3	15	10	0,39	0,37

© 2015 sera GmbH
Subject to technical modifications.

Dimensional drawing

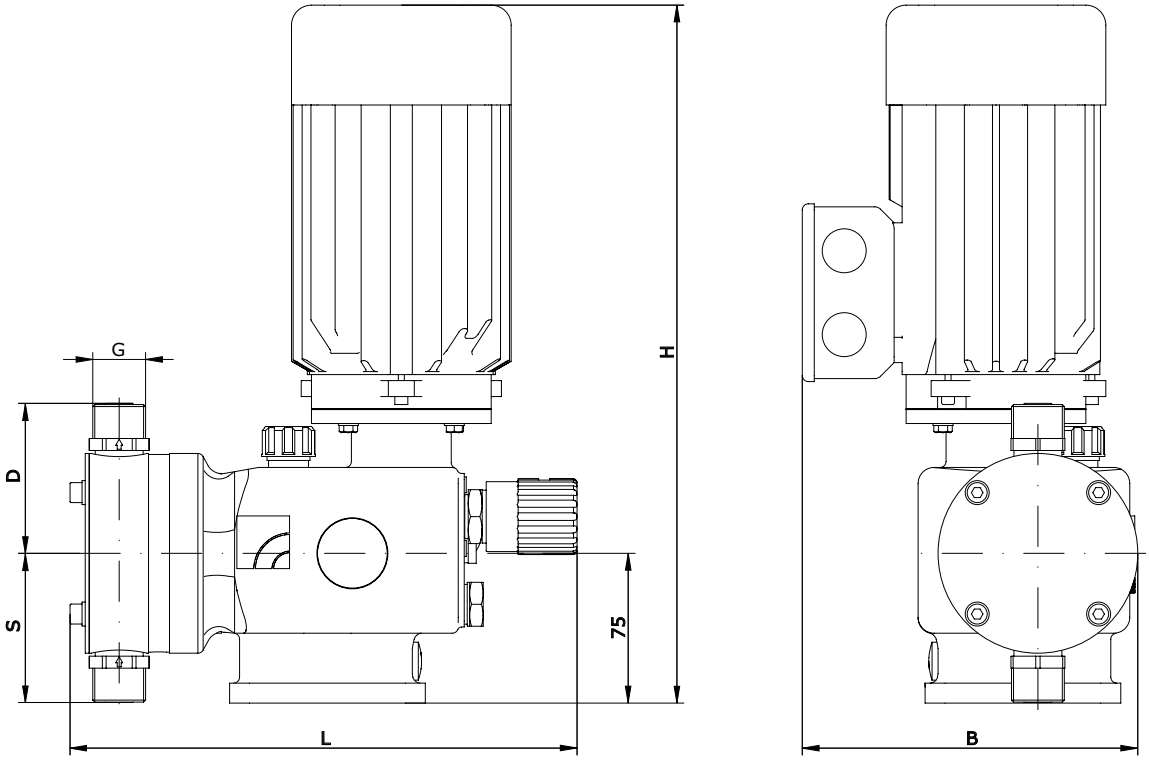

Dimensional chart

Indications in mm / inch

Type	G	S		D	
		mm	in	mm	in
R409.2-18e	G 3/4	56	2,2	64	2,52
R409.2-25e	G 3/4	56	2,2	64	2,52
R409.2-50e	G 3/4	76	2,99	69	2,72
R409.2-75e	G 3/4	69	2,72	69	2,72
R409.2-90e	G 3/4	76	2,99	76	2,99
R409.2-115e	G 3/4	76	2,99	76	2,99
R409.2-140e	G 3/4	76	2,99	76	2,99
R409.2-180e	G 3/4	76	2,99	76	2,99
R409.2-250e	G 1 1/4	122	4,8	122	4,8
R409.2-350e	G 1 1/4	122	4,8	122	4,8

Type	L		B		H		Weight
	mm	in	mm	in	mm	in	kg
R409.2-18e	270	10,63	190	7,48	380	14,96	8,6
R409.2-25e	270	10,63	190	7,48	380	14,96	8,6
R409.2-50e	270	10,63	190	7,48	380	14,96	8,4
R409.2-75e	270	10,63	190	7,48	380	14,96	8,4
R409.2-90e	275	10,83	192	7,56	380	14,96	10,5
R409.2-115e	275	10,83	192	7,56	380	14,96	9
R409.2-140e	275	10,83	192	7,56	380	14,96	10,5
R409.2-180e	275	10,83	192	7,56	380	14,96	9
R409.2-250e	330	12,99	225	8,86	380	14,96	13
R409.2-350e	330	12,99	225	8,86	380	14,96	13

■ Indication of weight acc. to order infomation

© 2015 **sera GmbH**
Subject to technical modifications.

Order information

Basic design

R409.2-18e to R409.2-25e
- Pump body PP-FRP
- Double valves PP-FRP
- Valve balls PTFE
- Valve seals FPM
- Working diaphragm PTFE-faced

R409.2-50e to R409.2-90e and R409.2-140e
- Pump body PP-FRP
- Single valves PP-FRP
- Valve balls PTFE
- Valve seals FPM
- Working diaphragm PTFE-faced

R409.2-115e and R409.2-180e
- Pump body PP-FRP
- Single valves PP-FRP
- Valve balls PTFE
- Valve seals FPM
- Working diaphragm PTFE-faced

R409.2-250e and R409.2-350e
- Pump body PP
- Single valves PP-FRP
- Valve balls PTFE
- Valve seals FPM
- Working diaphragm PTFE-faced

Motor:
- 230/400 V +/- 5% 50 Hz threephase, 460 V star +/- 5% 60 Hz threephase, IP 55, insul. cl. F

Further options and accessories:
- Connection pieces see chapter 4
- Product documentation see chapter 5

Type	Basic design		×
		Art.-no.	
R409.2-18e		16009594	
R409.2-25e		16007781	
R409.2-50e		16006831	
R409.2-75e		16007214	
R409.2-90e		16007393	
R409.2-115e		16006924	
R409.2-140e		16008211	
R409.2-180e		16009761	
R409.2-250e		16006745	
R409.2-350e		16008622	

Options/Accessories			R409.2-18e R409.2-25e	×	R409.2-50e R409.2-75e	×	R409.2-90e R409.2-140e	×	R409.2-115e R409.2-180e	×	R409.2-250e R409.2-350e	×
Pump body and valves	PP-FRP	single valves PP-FRP	–		●		●		●		–	
		double valves PP-FRP	●		❍		❍		❍		–	
	PP	single valves PP-FRP	–		–		–		–		●	
	PVC-U	single valves PVC-U	▲		▲		▲		▲		▲	
	PVDF-FRP	single valves PVDF-FRP	–		▲		▲		▲		–	
		double valves PVDF-FRP	▲		▲		▲		▲		–	
	PVDF	single valves PVDF-FRP	–		–		–		–		▲	
		double valves PVDF-FRP	–		–		–		–		▲	
	1.4571	single valves 1.4571/1.4581	–		–		–		–		▲	
		double valves 1.4571/1.4581	▲		▲		▲		▲		▲	
Valve balls 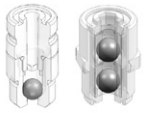	PTFE	single valves	❍		●		●		●		●	
		double valves	●		▲		▲		▲		▲	
	1.4401	single valves	❍		❍		❍		❍		❍	
		double valves	❍		❍		❍		❍		❍	
Valve sealings	FPM	single valves	❍		●		●		●		●	
		double valves	●		❍		❍		❍		❍	
	EPDM	single valves	❍		❍		❍		❍		❍	
		double valves	❍		❍		❍		❍		❍	
	FEP-covered	single valves	▲		▲		▲		▲		▲	
		double valves	▲		▲		▲		▲		▲	
Intergrated relief valve 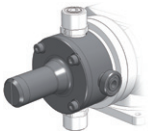	with PTFE-faced diaphragm, connection seal FPM or EPDM at pump body made of:											
	PP		▲		▲		▲		▲		▲	
	PVC-U		▲		▲		▲		▲		▲	
	PVDF		✆		✆		✆		✆		✆	
	1.4571		▲		▲		▲		▲		▲	
	Connection seals FEP-covered		▲		▲		▲		▲		▲	

● = Basis design – = not available ▲ = with add. price ✆ = on request ❍ = without add. price Art.-No. = available in basic design/ accessories

© 2015 sera GmbH
Subject to technical modifications.

Order information

Basic design

R409.2-18e to R409.2-25e
- Pump body PP-FRP
- Double valves PP-FRP
- Valve balls PTFE
- Valve seals FPM
- Working diaphragm PTFE-faced

R409.2-50e to R409.2-90e and R409.2-140e
- Pump body PP-FRP
- Single valves PP-FRP
- Valve balls PTFE
- Valve seals FPM
- Working diaphragm PTFE-faced

R409.2-115e and R409.2-180e
- Pump body PP-FRP
- Single valves PP-FRP
- Valve balls PTFE
- Valve seals FPM
- Working diaphragm EPDM

R409.2-250e and R409.2-350e
- Pump body PP
- Single valves PP-FRP
- Valve balls PTFE
- Valve seals FPM
- Working diaphragm PTFE-faced

Motor:
- 230/400 V +/- 5% 50 Hz threephase, 460 V star +/- 5% 60 Hz threephase, IP 55, insul. cl. F

Further options and accessories:
- Connection pieces see chapter 4
- Product documentation see chapter 5

Type	Basic design		×
		Art.-no.	
R409.2-18e		16009594	
R409.2-25e		16007781	
R409.2-50e		16006831	
R409.2-75e		16007214	
R409.2-90e		16007393	
R409.2-115e		16006924	
R409.2-140e		16008211	
R409.2-180e		16009761	
R409.2-250e		16006745	
R409.2-350e		16008622	

Options/Accessories			R409.2-18e R409.2-25e	×	R409.2-50e R409.2-75e	×	R409.2-90e R409.2-140e	×	R409.2-115e R409.2-180e	×	R409.2-250e R409.2-350e	×
Working diaphragms	EPDM		–		–		–		●		–	
	PTFE-faced		●		●		●		–		●	
	FPM		–		–		–		▲		–	
Diaphragm monitoring	Diaphragm rupture electrode conductive, mounted to pump											
	MBE-02		▲		▲		▲		▲		▲	
Diaphragm monitoring	Electrode relay, control cabinet assembly											
	ER-104	aux. energy 230 V AC	90022944		90022944		90022944		90022944		90022944	
		aux. energy 24 V DC	90022945		90022945		90022945		90022945		90022945	
	ER-142	aux. energy 230 V AC II(1)G [EExia] IIC acc. to ATEX 95	90200363		90200363		90200363		90200363		90200363	
Stroke length adjustment	with position indicator		▲		▲		▲		▲		▲	
Stroke frequency monitoring	Inductive contact											
	10-60 V DC, three-wire, PNP		▲		▲		▲		▲		▲	
	Namur execution, II2G EExia IICT6 acc. to ATEX95		▲		▲		▲		▲		▲	

● = Basis design – = not available ▲ = with add. price ✆ = on request ❍ = without add. price Art.-No. = available in basic design/ accessories

© 2015 **sera GmbH**
Subject to technical modifications.

Order information

Basic design

R409.2-18e to R409.2-25e
- Pump body PP-FRP
- Double valves PP-FRP
- Valve balls PTFE
- Valve seals FPM
- Working diaphragm PTFE-faced

R409.2-50e to R409.2-90e and R409.2-140e
- Pump body PP-FRP
- Single valves PP-FRP
- Valve balls PTFE
- Valve seals FPM
- Working diaphragm PTFE-faced

R409.2-115e and R409.2-180e
- Pump body PP-FRP
- Single valves PP-FRP
- Valve balls PTFE
- Valve seals FPM
- Working diaphragm EPDM

R409.2-250e and R409.2-350e
- Pump body PP
- Single valves PP-FRP
- Valve balls PTFE
- Valve seals FPM
- Working diaphragm PTFE-faced

Motor:
- 230/400 V +/- 5% 50 Hz threephase, 460 V star +/- 5% 60 Hz threephase, IP 55, insul. cl. F

Further options and accessories:
- Connection pieces see chapter 4
- Product documentation see chapter 5

Type	Basic design		×
		Art.-no.	
R409.2-18e		16009594	
R409.2-25e		16007781	
R409.2-50e		16006831	
R409.2-75e		16007214	
R409.2-90e		16007393	
R409.2-115e		16006924	
R409.2-140e		16008211	
R409.2-180e		16009761	
R409.2-250e		16006745	
R409.2-350e		16008622	

Options/Accessories		R409.2-18e R409.2-25e	×	R409.2-50e R409.2-75e	×	R409.2-90e R409.2-140e	×	R409.2-115e R409.2-180e	×	R409.2-250e R409.2-350e	×
Drive motor	Add. price for special drive	▲		▲		▲		▲		▲	
	Special voltage	✆		✆		✆		✆		✆	
	Enclosure IP 65	▲		▲		▲		▲		▲	
	Protective roof for the fan of the drive	▲		▲		▲		▲		▲	
	VIK-design	✆		✆		✆		✆		✆	
	II2G EExe IIT4 (acc. to ATEX95)	▲		▲		▲		▲		▲	
	Single phase AC 230V / 50 Hz with capacitor	▲		▲		▲		▲		▲	
	electrical acc. to uL / CSA	✆		✆		✆		✆		✆	
	Driver for converter operation incl. integrated posistor, 5-50/60Hz	▲		▲		▲		▲		▲	
	Driver for converter operation II2G EExde IICT4, 5-50 Hz acc. ATEX95, incl. integrated posistor	▲		▲		▲		▲		▲	
	■ Please note: If one or several options ‚drive motor' are required to fix the add. price of the drive, the calculation will be as follows: ‚add. price special drive' plus the single options of the drive ■ Additional price and availability must be requested from **sera**										
Stroke length adjustment electrical 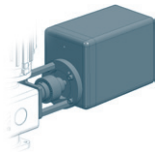	**Actuator N C1-BA** 230 V, +/- 10%, 50/60 Hz, 128s/10 U, 1,5 Nm incl. mounting plate for actuator	▲		▲		▲		▲		▲	
	Electronic positioning controller PMR3 input signal 0/4-20 mA incl. feedback signal 0/4-20 mA (only in N C1-BA integrated)	▲		▲		▲		▲		▲	
	Actuator D30D-10-Ex (II2G EExde IICT4) acc. to ATEX 95, 400 V, 50 Hz, 10 U/min, incl. mounting-kit for actuator and base plate	▲		▲		▲		▲		▲	

● = Basis design – = not available ▲ = with add. price ✆ = on request ❍ = without add. price Art.-No. = available in basic design/ accessories

© 2015 **sera GmbH**
Subject to technical modifications.

Order information

Basic design

R409.2-18e to R409.2-25e
- Pump body PP-FRP
- Double valves PP-FRP
- Valve balls PTFE
- Valve seals FPM
- Working diaphragm PTFE-faced

R409.2-50e to R409.2-90e and R409.2-140e
- Pump body PP-FRP
- Single valves PP-FRP
- Valve balls PTFE
- Valve seals FPM
- Working diaphragm PTFE-faced

R409.2-115e and R409.2-180e
- Pump body PP-FRP
- Single valves PP-FRP
- Valve balls PTFE
- Valve seals FPM
- Working diaphragm EPDM

R409.2-250e and R409.2-350e
- Pump body PP
- Single valves PP-FRP
- Valve balls PTFE
- Valve seals FPM
- Working diaphragm PTFE-faced

Motor:
- 230/400 V +/- 5% 50 Hz threephase, 460 V star +/- 5% 60 Hz threephase, IP 55, insul. cl. F

Further options and accessories:
- Connection pieces see chapter 4
- Product documentation see chapter 5

Type	Basic design		×
	Price (EUR)	Art.-no.	
R409.2-18e		16009594	
R409.2-25e		16007781	
R409.2-50e		16006831	
R409.2-75e		16007214	
R409.2-90e		16007393	
R409.2-115e		16006924	
R409.2-140e		16008211	
R409.2-180e		16009761	
R409.2-250e		16006745	
R409.2-350e		16008622	

2

Options/Accessories			R409.2-18e R409.2-25e ×	R409.2-50e R409.2-75e ×	R409.2-90e R409.2-140e ×	R409.2-115e R409.2-180e ×	R409.2-250e R409.2-350e ×
Stroke frequency adjustment electrical 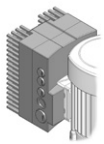	Frequency converter series INVEOR mounted-on, input 4-20mA						
	Single-phase 200-230 V, +/- 10%, 50/60 Hz	0,37 kW	▲	▲	▲	▲	▲
	Three-phase 400-480 V, +/- 10%, 50/60 Hz	0,55 kW	▲	▲	▲	▲	▲
	Service module MMI incl. connection cable		90039445	90039445	90039445	90039445	90039445
Stroke frequency adjustment electrical 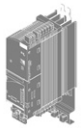	Frequency converter series 8200 Vector input 4-20mA, incl. Keypad (for integration into control cabinet)						
	Single-phase 230 V, 50/60 Hz	0,25 kW	90017521	–	–	–	–
		0,37 kW	–	90017522	90017522	90017522	90017522
	Three-phase 320-550 V, +/- 0%, 50/60 Hz	0,55 kW	90017526	90017526	90017526	90017526	90017526
Console 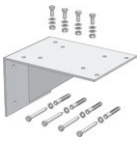	for wall mounting incl. fixing screws	1.4301	90023875	90023875	90023875	90023875	90023875
		PP	90023848	90023848	90023848	90023848	90023848

● = Basis design – = not available ▲ = with add. price ✆ = on request ❍ = without add. price Art.-No. = available in basic design/ accessories

© 2015 **sera GmbH**
Subject to technical modifications.

Fittings for suction side of dosing pumps		R409.2-18e R409.2-25e		R409.2-50e		R409.2-75e R409.2-90e		R409.2-115e up to R409.2-180e		R409.2-250e R409.2-350e	
		Type	p.	Type	p.	Type	p.	Type	p.	Type	p.
Pulsation damper without separating diaphragm	PVC-U / PP / 1.4571	✆		✆		✆		✆		✆	
Suction lance	with level switch 1-stage	SL-11.1	3.28	SL-02	3.30	SL-02	3.30	SL-02	3.30	SLP-151.1	3.38
	without level switch	S-01	3.34	S-01	3.34	S-01	3.34	S-01	3.34	S-01	3.34
	with level switch 2-stage	SL-12.1	3.28	SL-02	3.30	SL-02	3.30	SL-02	3.30	SLP-152.1	3.38
Suction aid / Siphon Vessel	transparent PVC-U	770.2	3.54	770.2	3.54	770.2	3.54	770.2	3.54	770.2	3.54
Calibration Pot	PVC-U	792.1	3.56	792.1	3.56	793.1	3.56	794.1	3.56	795.1	3.56
Foot valve	PVC-U	731	3.60	731	3.60	731	3.60	731	3.60	732.3	3.58
	PP / PVDF	–		–		–		–		732	3.60
	1.4571	731	3.60	731	3.60	731	3.60	731	3.60	732	3.60
	PP-FRP / PVDF-FRP	781.1	3.64	781.1	3.64	781.1	3.64	781.1	3.64	783.1	3.64
Line strainer	PVC-U / PP / PVDF / 1.4408	✆		✆		✆		✆		✆	

Fittings for pressure side of dosing pumps		R409.2-18e R409.2-25e		R409.2-50e		R409.2-75e R409.2-90e		R409.2-115e up to R409.2-180e		R409.2-250e R409.2-350e	
		Type	p.	Type	p.	Type	p.	Type	p.	Type	p.
Diaphragm-type relief valve		620.10	3.4	620.10	3.4	622.10	3.4	622.10	3.4	622.10	3.4
Diaphragm-type pressure keeping valve		620.D	3.6	620.D	3.6	622.D	3.6	622.D	3.6	622.D	3.6
Multi-function valve	4 bar opening pressure	MFV 05004	3.8	MFV 05004	3.8	✆		✆		✆	
	6 bar opening pressure	MFV 05006	3.8	MFV 05006	3.8	✆		✆		✆	
	10 bar opening pressure	MFV 05010	3.8	MFV 05010	3.8	✆		✆		✆	
Pulsation damper without separating diaphragm	PVC-U / PP / 1.4571	✆		✆		✆		✆		✆	
Diaphragm-pulsation damper with PTFE/PTFE-faced diaphragm	PVC-U / PP / PVDF	720.1	3.16	721.2	3.16	722.1	3.16	722.1	3.16	723.1	3.16
	1.4571	721.1	3.20	721.1	3.20	722.1	3.20	722.1	3.20	723.1	3.20
Diaphragm-pulsation damper with Elastomer-diaphragm	PVC-U / PP / PVDF	✆		✆		✆		✆		713.1	3.12
	1.4571	810.1-0,16/10	3.22	810.1-0,16/10	3.22	810.1-0,32/10	3.22	810.1-0,32/10	3.22	810.1-0,75/10	3.22
Check valve	PVC-U	✆		✆		✆		✆		✆	
	PP-FRP / PVDF-FRP	✆		✆		✆		✆		✆	
	1.4571	✆		✆		✆		✆		✆	
Dosing valve	PP-FRP / PVDF-FRP	691.1	3.40	691.1	3.40	691.1	3.40	691.1	3.40	693.1	3.40
	PVC-U	691.1	3.40	691.1	3.40	691.1	3.40	691.1	3.40	✆	
	1.4571	691.1	3.40	691.1	3.40	691.1	3.40	691.1	3.40	692.1	3.40
	PVC-U / PP / PVDF	681.1	3.44	681.1	3.44	681.1	3.44	681.1	3.44	682.1	3.44
Injection fitting	PVC-U / PP / PVDF	8061.1	3.46	8061.1	3.46	8061.1	3.46	8061.1	3.46	8062.1	3.46

The above allocation considers the fittings which have to be used at least regarding their nominal width in order to ensure the safe and trouble-free operation of the respective pumps when feeding liquids which are resembling to water.
Absolutely note the max. admissible operating pressure of the fittings.
The use of fittings of a bigger nominal width is unproblematically possible in most cases.
When choosing the fittings note the installation instructions for dosing pumps or confer with **sera.**

© 2015 **sera GmbH**
Subject to technical modifications.

© 2015 **sera GmbH**
Subject to technical modifications.

R410.2 in survey

- Compact design
- Low weight
- Safe to run dry
- Leakage free
- Low maintenance
- Easy to use
- High dosing accuracy
- Integrable into automatic processes
- Manual stroke length adjustment
- Robust metallic housing

Infobox

Order information	Page 2.78
Options/accessories	Page 2.78
Fittings-allocation	Page 2.81
Connecting pieces	Chapter 4
Resistance chart	Chapter 5
Installation examples	Chapter 5

2

Technical data

Type	Nominal capacity 50 Hz		Nominal capacity 60 Hz		Nominal stroke frequency 50 Hz	Nominal stroke frequency 60 Hz	Admissible Counterpressure	
	l/h	gal/h	l/h	gal/h	1/min	1/min	bar	psi
R410.2-200e	0 - 200	0 - 52,83	0 - 240	0 - 63,40	76	92	8	116
R410.2-280e	0 - 280	0 - 73,97	0 - 336	0 - 88,76	97	116	8	116
R410.2-450e	0 - 450	0 - 118,88	0 - 540	0 - 142,65	76	92	6	87
R410.2-570e	0 - 570	0 - 150,58	0 - 684	0 - 180,69	97	116	6	87
R410.2-700e	0 - 700	0 - 184,92	0 - 840	0 - 221,90	76	92	5	72,5
R410.2-900e	0 - 900	0 - 237,75	0 - 1.080	0 - 285,31	97	116	5	72,5
R410.2-1100e	0 - 1.100	0 - 290,59	0 - 1.320	0 - 348,71	76	92	5	72,5
R410.2-1450e	0 - 1.450	0 - 383,05	–	–	97	–	5	72,5

Type	Admissible pressure at pump inlet		Max. Suction height	Inlet/ Outlet nominal width	Max. Stroke length		Motor output
	bar	psi	mWC	DN	mm	in	kW
R410.2-200e	-0,5 / 0	-7,2 / 0	5	15	13	0,51	0,75
R410.2-280e	-0,5 / 0	-7,2 / 0	5	15	13	0,51	0,75
R410.2-450e	-0,5 / 0	-7,2 / 0	5	15	13	0,51	0,75
R410.2-570e	-0,5 / 0	-7,2 / 0	5	15	13	0,51	0,75
R410.2-700e	-0,3 / 0	-4,3 / 0	3	20	13	0,51	0,75
R410.2-900e	-0,3 / 0	-4,3 / 0	3	20	13	0,51	0,75
R410.2-1100e	-0,3 / 0	-4,3 / 0	3	25	20	0,79	1,5
R410.2-1450e	-0,3 / 0	-4,3 / 0	3	25	20	0,79	1,5

© 2015 **sera GmbH**
Subject to technical modifications.

Dimensional drawing

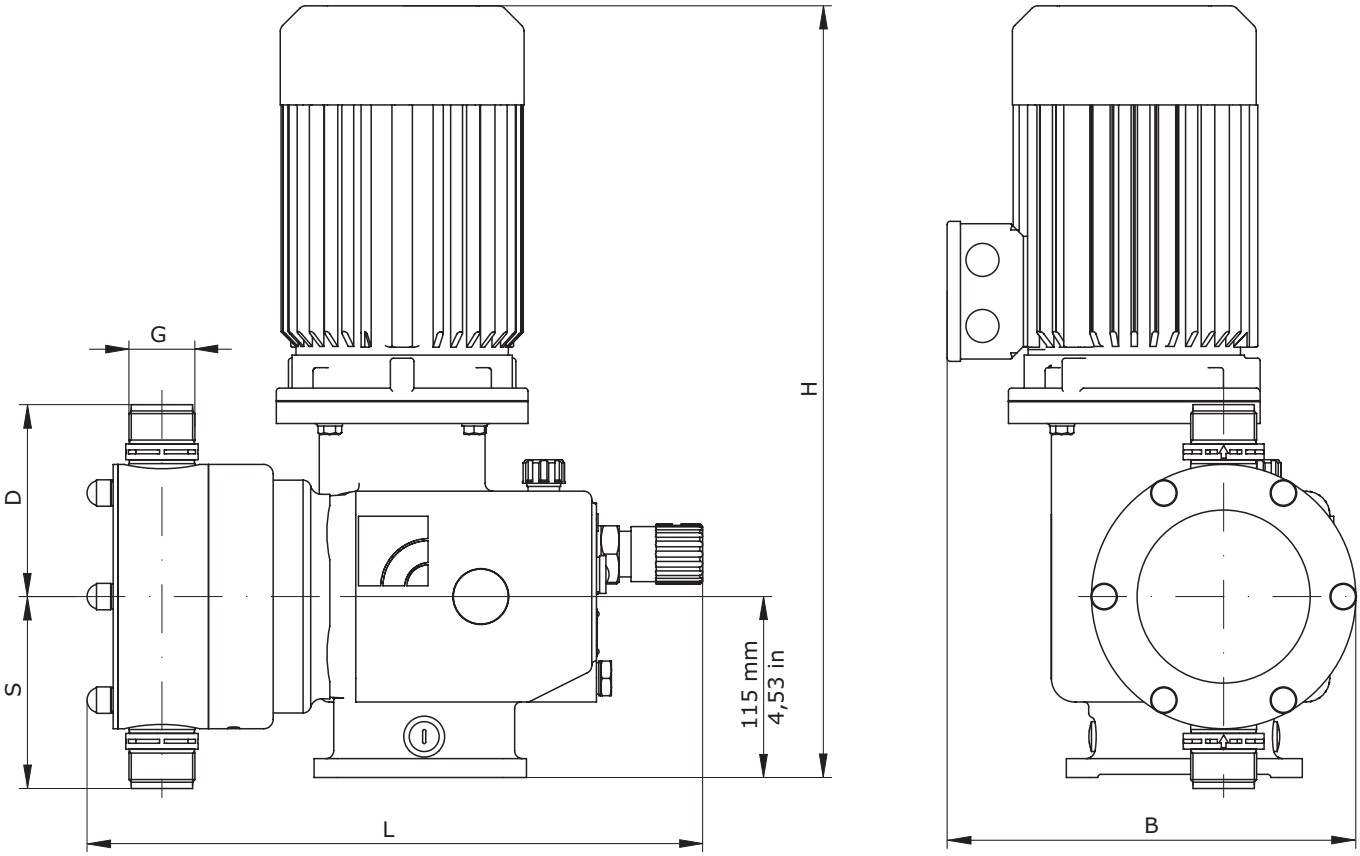

Dimensional chart

Indications in mm / inch

Type	G	S		D	
		mm	in	mm	in
R410.2-200e	G 1 1/4	122	4,8	122	4,8
R410.2-280e	G 1 1/4	122	4,8	122	4,8
R410.2-450e	G 1 1/4	122	4,8	122	4,8
R410.2-570e	G 1 1/4	122	4,8	122	4,8
R410.2-700e	G 1 1/4	142	5,59	142	5,59
R410.2-900e	G 1 1/4	142	5,59	142	5,59
R410.2-1100e	G 1 1/4	142	5,59	142	5,59
R410.2-1450e	G 1 1/4	142	5,59	142	5,59

Type	L		B		H		Weight
	mm	in	mm	in	mm	in	kg
R410.2-200e	405	15,94	275	10,83	490	19,29	29
R410.2-280e	405	15,94	275	10,83	490	19,29	29
R410.2-450e	405	15,94	275	10,83	490	19,29	29
R410.2-570e	405	15,94	275	10,83	490	19,29	29
R410.2-700e	480	18,9	330	12,99	525	20,67	33
R410.2-900e	480	18,9	330	12,99	525	20,67	33
R410.2-1100e	480	18,9	330	12,99	525	20,67	35
R410.2-1450e	480	18,9	330	12,99	525	20,67	35

■ Indication of weight for basic design acc. to order information

© 2015 **sera GmbH**
Subject to technical modifications.

Order information

Basic design

R410.2-200e to R410.2-1450e

- Pump body PP
- Single valve PP-FRP
- Valve balls PTFE
- Valve seals FPM
- Working diaphragm PTFE-faced

Motor:

- 230/400V +/- 5% 50 Hz threephase, 460 V star +/- 5% 60 Hz threephase, IP 55, insul. cl. F

Further options and accessories:

- Connection pieces see chapter 4
- Product documentation see chapter 5

Type	Basic design		×
		Art.-no.	
R410.2-200e		16008839	
R410.2-280e		16006790	
R410.2-450e		16006697	
R410.2-570e		16007118	
R410.2-700e		16008497	
R410.2-900e		16008269	
R410.2-1100e		16007679	
R410.2-1450e		16007168	

Options/Accessories			R410.2-200e R410.2-280e	×	R410.2-450e R410.2-570e	×	R410.2-700e R410.2-900e	×	R410.2-1100e R410.2-1450e	×
Pump body and valves	PP	single valves PP-FRP	●		●		●		●	
	PVC-U	single valves PVC-U	▲		▲		▲		▲	
	PVDF	single valves PVDF-FRP	▲		▲		▲		▲	
	1.4571	single valves 1.4571/1.4581	▲		▲		▲		▲	
Valve balls	PTFE	single valves	●		●		●		●	
	1.4401	single valves	❍		❍		❍		❍	
Valve sealings	FPM	single valves	●		●		●		●	
	EPDM	single valves	❍		❍		❍		❍	
	FEP-covered	single valves	▲		▲		▲		▲	
Intergrated relief valve	with PTFE-faced diaphragm, connection seal FPM or EPDM at pump body made of:									
	PP		▲		▲		–		–	
	PVC-U		▲		▲		–		–	
	PVDF		✆		✆		–		–	
	1.4571		▲		▲		–		–	
	Connection seals FEP-covered		▲		▲		–		–	
Diaphragm monitoring	Diaphragm rupture electrode conductive, mounted to pump									
	MBE-02		▲		▲		▲		▲	
Diaphragm monitoring	Electrode relay, control cabinet assembly									
	ER-104	aux. energy 230 V AC	90022944		90022944		90022944		90022944	
		aux. energy 24 V DC	90022945		90022945		90022945		90022945	
	ER-142	aux. energy 230 V AC II(1)G [EExia] IIC acc. to ATEX 95	90200363		90200363		90200363		90200363	

● = Basis design – = not available ▲ = with add. price ✆ = on request ❍ = without add. price Art.-No. = available in basic design/ accessories

© 2015 **sera GmbH**
Subject to technical modifications.

Order information

Basic design

R410.2-200e to R410.2-1450e

- Pump body PP
- Single valve PP-FRP
- Valve balls PTFE
- Valve seals FPM
- Working diaphragm PTFE-faced

Motor:

- 230/400V +/- 5% 50 Hz threephase, 460 V star +/- 5% 60 Hz threephase, IP 55, insul. cl. F

Further options and accessories:

- Connection pieces see chapter 4
- Product documentation see chapter 5

Type	Basic design		×
		Art.-no.	
R410.2-200e		16008839	
R410.2-280e		16006790	
R410.2-450e		16006697	
R410.2-570e		16007118	
R410.2-700e		16008497	
R410.2-900e		16008269	
R410.2-1100e		16007679	
R410.2-1450e		16007168	

Options/Accessories		R410.2-200e R410.2-280e	×	R410.2-450e R410.2-570e	×	R410.2-700e R410.2-900e	×	R410.2-1100e R410.2-1450e	×
Stroke length adjustment	with position indicator	▲		▲		▲		▲	
Stroke frequency monitoring	Induktiv-Kontakt								
	10-60 V DC, three-wire, PNP	▲		▲		▲		▲	
	Namur execution, II2G EExia IICT6 acc. to ATEX95	▲		▲		▲		▲	
Drive motor	Add. price for special drive	▲		▲		▲		▲	
	Special voltage	✆		✆		✆		✆	
	Enclosure IP 65	▲		▲		▲		▲	
	Protective roof for the fan of the drive	▲		▲		▲		▲	
	VIK-design	✆		✆		✆		✆	
	II2G EExe IIT4 (acc. to ATEX95), 50 Hz	▲		▲		▲		▲	
	Single phase AC 230V / 50 Hz with capacitor	▲		▲		▲		▲	
	electrical acc. to uL / CSA	✆		✆		✆		✆	
	Driver for converter operation incl. integrated posistor, 5-50/60Hz	▲		▲		▲		▲	
	Driver for converter operation II2G EExde IICT4, 5-50 Hz acc. ATEX95, incl. integrated posistor	▲		▲		▲		▲	

- Please note: If one or several options ‚drive motor' are required to fix the add. price of the drive, the calculation will be as follows: ‚add. price special drive' plus the single options of the drive
- Additional price and availability must be requested from **sera**

● = Basis design – = not available ▲ = with add. price ✆ = on request ❍ = without add. price Art.-No. = available in basic design/ accessories

2

© 2015 **sera GmbH**
Subject to technical modifications.

Order information

Basic design

R410.2-200e to R410.2-1450e

- Pump body PP
- Single valve PP-FRP
- Valve balls PTFE
- Valve seals FPM
- Working diaphragm PTFE-faced

Motor:

- 230/400V +/- 5% 50 Hz threephase, 460 V star +/- 5% 60 Hz threephase, IP 55, insul. cl. F

Further options and accessories:

- Connection pieces see chapter 4
- Product documentation see chapter 5

Type	Basic design		×
		Art.-no.	
R410.2-200e		16008839	
R410.2-280e		16006790	
R410.2-450e		16006697	
R410.2-570e		16007118	
R410.2-700e		16008497	
R410.2-900e		16008269	
R410.2-1100e		16007679	
R410.2-1450e		16007168	

Options/Accessories			R410.2-200e R410.2-280e	×	R410.2-450e R410.2-570e	×	R410.2-700e R410.2-900e	×	R410.2-1100e R410.2-1450e	×
Stroke length adjustment electrical 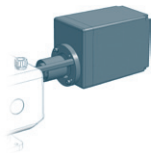	Actuator N1S 230 V, 50/60 Hz, 128s/10 U, 15 Nm Potentiometer 1 kOhm incl. mounting kit for actuator		▲		▲		▲		▲	
	Electronic positioning controller PMR3 input signal 0/4-20 mA incl. feedback signal 0/4-20 mA (only in N 1S integrated)		▲		▲		▲		▲	
	Actuator D30D-10-Ex (II2G EExde IICT4) acc. to ATEX 95, 400 V, 50 Hz, 10 U/min, incl. mounting-kit for actuator and base plate		▲		▲		▲		▲	
	■ uL / CSA - design		✆		✆		✆		✆	
Stroke frequency adjustment electrical 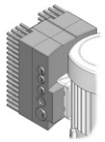	Frequency converter series INVEOR mounted-on, input 4-20mA									
	Three-phase 400-480 V, +/- 0%, 50/60 Hz	0,75 kW	▲		▲		–		–	
		1,5 kW	–		–		▲		▲	
	Service module MMI incl. connection cable		90039445		90039445		90039445		90039445	
Stroke frequency adjustment electrical	Frequency converter series 8200 Vector input 4-20mA, incl. Keypad (for integration into control cabinet)									
	Single-phase 230 V, 50/60 Hz	0,75 kW	90017524		90017524		–		–	
		1,5 kW	–		–		90016865		90016865	
	Three-phase 320-550 V, +/- 0%, 50/60 Hz	0,75 kW	90017527		90017527		–		–	
		1,5 kW	–		–		90017528		90017528	
Console 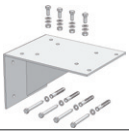	for wall mounting incl. fixing screws	1.4301	90023876		90023876		90023876		90023876	
		PP	90023849		90023849		90023849		90023849	

● = Basis design – = not available ▲ = with add. price ✆ = on request ❍ = without add. price Art.-No. = available in basic design/ accessories

© 2015 **sera GmbH**
Subject to technical modifications.

Fittings for suction side of dosing pumps		R410.2-200e R410.2-280e		R410.2-450e R410.2-570e		R410.2-700e		R410.2-900e		R410.2-1100e R410.2-1450e	
		Type	p.	Type	p.		p.	Type	p.	Type	p.
Pulsation damper without separating diaphragm	**PVC-U / PP / 1.4571**	✆		✆		✆		✆		✆	
Suction lance	**with level switch 1-stage**	SLP-151.1	3.32	SLP-151.1	3.32	SLP-151.1	3.32	✆		✆	
	without level switch	S-01	3.34	S-01	3.34	S-01	3.34	S-01	3.34	✆	
Suction aid / Siphon Vessel	**transparent PVC-U**	770.2	3.54	770.2	3.54	771.2	3.54	771.2	3.54	772.2	3.54
Calibration Pot	**PVC-U**	795.1	3.56	795.1	3.56	796.1	3.56	796.1	3.56	796.1	3.56
Foot valve	**PVC-U**	732.3	3.58	732.3	3.58	733.3	3.58	733.3	3.58	733.3	3.58
	PP / PVDF	732	3.60	732	3.60	733	3.60	733	3.60	733	3.60
	1.4571	732	3.60	732	3.60	733	3.60	733	3.60	733	3.60
	PP-FRP / PVDF-FRP	783.1	3.64	783.1	3.64	783.1	3.64	783.1	3.64	783.1	3.64
Line strainer	**PVC-U / PP / PVDF / 1.4408**	✆		✆		✆		✆		✆	

Fittings for pressure side of dosing pumps		R410.2-200e R410.2-280e		R410.2-450e R410.2-570e		R410.2-700e		R410.2-900e		R410.2-1100e R410.2-1450e	
		Type	p.	Type	p.	Type	p.	Type	p.	Type	p.
Diaphragm-type relief valve		622.10	3.4	622.10	3.4	623.10	3.4	623.10	3.4	624.10	3.4
Diaphragm-type pressure keeping valve		622.D	3.6	622.D	3.6	623.D	3.6	623.D	3.6	624.D	3.6
Pulsation damper without separating diaphragm	**PVC-U / PP / 1.4571**	✆		✆		✆		✆		✆	
Diaphragm-pulsation damper with Elastomer-diaphragm	**PVC-U / PP / PVDF**	713.1	3.12	713.1	3.12	713.1	3.12	713.1	3.12	713.1	3.12
	1.4571	810.1-0,75/10	3.22	810.1-2,0/10	3.22	810.1-2,0/10	3.22	810.1-2,0/10	3.22	713.1	3.14
Diaphragm-pulsation damper with PTFE/PTFE-faced diaphragm	**PVC-U / PP / PVDF**	723.1	3.16	✆		✆		✆		✆	
	1.4571	723.1	3.20	✆		✆		✆		✆	
Check valve	**PP-FRP / PVDF-FRP**	✆		✆		✆		✆		✆	
	1.4571	✆		✆		✆		✆		✆	
Dosing valve	**PP-FRP / PVDF-FRP**	693.1	3.40	693.1	3.40	693.1	3.40	693.1	3.40	693.1	3.40
	1.4571	692.1	3.40	692.1	3.40	693.1	3.40	693.1	3.40	693.1	3.40
	PVC-U / PP / PVDF	682.1	3.44	682.1	3.44	683.1	3.44	683.1	3.44	684.1	3.44
Injection fitting	**PVC-U / PP / PVDF**	8062.1	3.46	8062.1	3.46	8063.1	3.46	8063.1	3.46	8063.1	3.46

The above allocation considers the fittings which have to be used at least regarding their nominal width in order to ensure the safe and trouble-free operation of the respective pumps when feeding liquids which are resembling to water.
Absolutely note the max. admissible operating pressure of the fittings.
The use of fittings of a bigger nominal width is unproblematically possible in most cases.
When choosing the fittings note the installation instructions for dosing pumps or confer with **sera**

© 2015 **sera GmbH**
Subject to technical modifications.

R409.2-...ML in survey

- Compact design
- Multi-layer diaphragm technology
- Safe to run dry
- Leakage free
- Low maintenance
- Easy to use
- High dosing accuracy
- Integrable into automatic processes
- Manual stroke length adjustment
- Robust metallic housing

Infobox

Order information	Page 2.84
Options/accessories	Page 2.84
Fittings-allocation	Page 2.87
Connecting pieces	Chapter 4
Resistance chart	Chapter 5
Installation examples	Chapter 5

2

Technical data

Type	Nominal capacity				Nominal stroke frequency		Capacity per stroke	Admissible Counterpressure	
	50 Hz		60 Hz		50 Hz	60 Hz			
	l/h	gal/h	l/h	gal/h	1/min	1/min	ml/stroke	bar	psi
R409.2-11ML	0 - 11	0 - 2,91	0 - 13,2	0 - 3,49	100	120	1,8	20	290
R409.2-17ML	0 - 17	0 - 4,49	0 - 20	0 - 5,28	150	180	1,8	20	290
R409.2-30ML	0 - 30	0 - 7,93	0 - 36	0 - 9,51	100	120	5	16	232
R409.2-45ML	0 - 45	0 - 11,89	0 - 54	0 - 14,27	150	180	5	16	232
R409.2-72ML	0 - 72	0 - 19,02	0 - 86	0 - 22,72	100	120	12	10	145
R409.2-110ML	0 - 110	0 - 29,06	0 - 132	0 - 34,87	150	180	12	10	145
R409.2-150ML	0 - 150	0 - 39,63	0 - 180	0 - 47,55	100	120	25	4	58
R409.2-220ML	0 - 220	0 - 58,12	0 - 264	0 - 69,74	150	180	24	4	58

- Note: The admissible counterpressure is 10 bar (145 psi) or lower when plastic pump bodies are used.

Type	Admissible pressure at pump inlet		Max. Suction height	Inlet/ Outlet nominal width	Max. Stroke length		Motor output
	bar	psi	mWC	DN	mm	in	kW
R409.2-11ML	-0,3 / 0	-4,3 / 0	3	10	4	0,16	0,37
R409.2-17ML	-0,3 / 0	-4,3 / 0	3	10	4	0,16	0,37
R409.2-30ML	-0,3 / 0	-4,3 / 0	3	10	6	0,24	0,37
R409.2-45ML	-0,3 / 0	-4,3 / 0	3	10	6	0,24	0,37
R409.2-72ML	-0,3 / 0	-4,3 / 0	3	15	8	0,31	0,37
R409.2-110ML	-0,3 / 0	-4,3 / 0	3	15	8	0,31	0,37
R409.2-150ML	-0,3 / 0	-4,3 / 0	3	15	10	0,39	0,37
R409.2-220ML	-0,3 / 0	-4,3 / 0	3	15	10	0,39	0,37

© 2015 sera GmbH
Subject to technical modifications.

Dimensional drawing

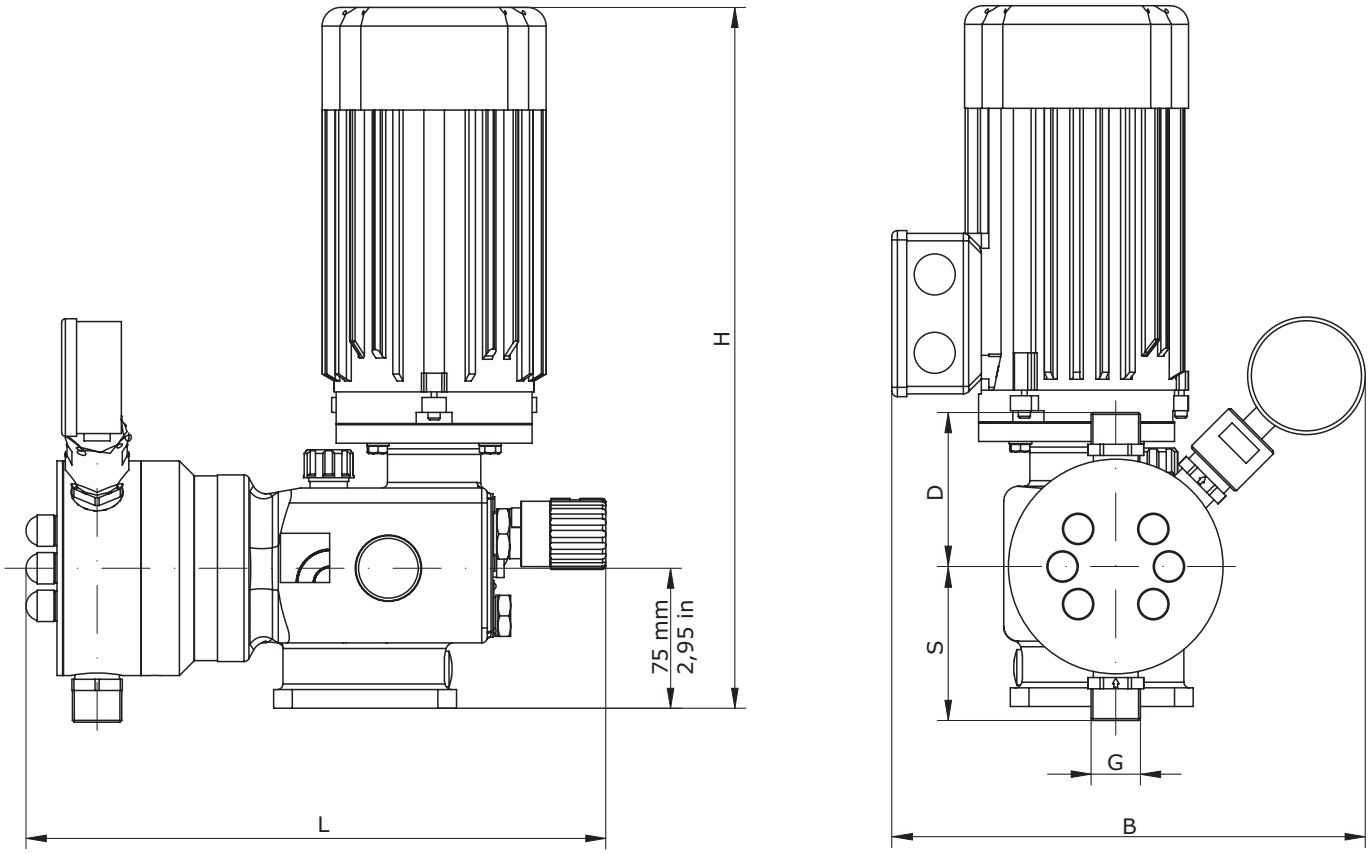

Dimensional chart

Indications in mm / inch

Type	G	S		D	
		mm	in	mm	in
R409.2-11ML	G 3/4	83	3,27	83	3,27
R409.2-17ML	G 3/4	83	3,27	83	3,27
R409.2-30ML	G 3/4	90	3,54	90	3,54
R409.2-45ML	G 3/4	90	3,54	90	3,54
R409.2-72ML	G 3/4	94	3,7	94	3,7
R409.2-110ML	G 3/4	94	3,7	94	3,7
R409.2-150ML	G 1 1/4	127	5	127	5
R409.2-220ML	G 1 1/4	127	5	127	5

Type	L		B		H		Weight
	mm	in	mm	in	mm	in	kg
R409.2-11ML	311	12,24	254	10	376	14,8	12,5
R409.2-17ML	311	12,24	254	10	376	14,8	12,5
R409.2-30ML	319	12,56	258	10,16	376	14,8	13
R409.2-45ML	319	12,56	258	10,16	376	14,8	13
R409.2-72ML	324	12,76	261	10,28	376	14,8	13,5
R409.2-110ML	324	12,76	261	10,28	376	14,8	13,5
R409.2-150ML	341	13,43	275	10,83	376	14,8	14,5
R409.2-220ML	341	13,43	275	10,83	376	14,8	14,5

- Indication of weight for basic desgin acc. to order information

© 2015 **sera GmbH**
Subject to technical modifications.

Order information

Basic design

R409.2-11ML up to R409.2-45ML

- Pump body PP
- Double valves PP-FRP
- Valve balls PTFE
- Valve seals FPM
- Multi-layer diaphragm PTFE
- optical diaphragm rupture indicator with manometer

R409.2-72ML up to R409.2-220ML

- Pump body PP
- Single valves PP-FRP
- Valve balls PTFE
- Valve seals FPM
- Multi-layer diaphragm PTFE
- optical diaphragm rupture indicator with manometer

Motor:

- 230/400 V +/- 5% 50 Hz threephase, 460 V star +/- 5% 60 Hz threephase, IP 55, insul. cl. F

Further options and accessories:

- Connection pieces see chapter 4
- Product documentation see chapter 5

Type	Basic design		×
		Art.-no.	
R409.2-11ML		16021612	
R409.2-17ML		16017429	
R409.2-30ML		16021613	
R409.2-45ML		16021614	
R409.2-72ML		15003177	
R409.2-110ML		16015813	
R409.2-150ML		16021615	
R409.2-220ML		16015681	

Options/Accessories			R409.2-11ML R409.2-17ML	×	R409.2-30ML R409.2-45ML	×	R409.2-72ML R409.2-110ML	×	R409.2-150ML R409.2-220ML	×
Pump body and valves	PP	single valves PP-FRP	–		–		●		●	
		double valves PP-FRP	●		●		–		–	
	PVC-U	single valves PVC-U	–		▲		▲		▲	
		chamber valves (double valves) PVC-U	▲		–		–		–	
	PVDF	single valves PVDF-FRP	–		–		▲		▲	
		double valves PVDF-FRP	▲		▲		–		–	
	1.4571	single valves 1.4571/1.4581	–		–		–		▲	
		double valves 1.4571/1.4581	▲		▲		▲		–	
Valve balls 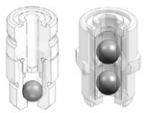	PTFE	single valves	–		❍		●		●	
		double valves	●		●		▲		–	
	1.4401	single valves	–		❍		❍		❍	
		double valves	❍		❍		❍		–	
Valve sealings	FPM	single valves	–		❍		●		●	
		double valves	●		●		❍		–	
	EPDM	single valves	–		❍		❍		❍	
		double valves	❍		❍		❍		–	
	FEP-covered	single valves	–		▲		▲		▲	
		double valves	▲		▲		▲		–	
Diaphragm monitoring	optical diaphragm rupture indicator with manometer		●		●		●		●	
	Pressure switch IP 65		▲		▲		▲		▲	
	Pressure switch II2G EExd IIC T5 or T6 acc. to ATEX95		▲		▲		▲		▲	
Stroke length adjustment	with position indicator		▲		▲		▲		▲	

● = Basis design – = not available ▲ = with add. price ✆ = on request ❍ = without add. price Art.-No. = available in basic design/ accessories

© 2015 sera GmbH
Subject to technical modifications.

Order information

Basic design

R409.2-11ML up to R409.2-45ML

- Pump body PP
- Double valves PP-FRP
- Valve balls PTFE
- Valve seals FPM
- Multi-layer diaphragm PTFE
- optical diaphragm rupture indicator with manometer

R409.2-72ML up to R409.2-220ML

- Pump body PP
- Single valves PP-FRP
- Valve balls PTFE
- Valve seals FPM
- Multi-layer diaphragm PTFE
- optical diaphragm rupture indicator with manometer

Motor:

- 230/400 V +/- 5% 50 Hz threephase, 460 V star +/- 5% 60 Hz threephase, IP 55, insul. cl. F

Further options and accessories:

- Connection pieces see chapter 4
- Product documentation see chapter 5

Type	Basic design		×
	Price (EUR)	Art.-no.	
R409.2-11ML		16021612	
R409.2-17ML		16017429	
R409.2-30ML		16021613	
R409.2-45ML		16021614	
R409.2-72ML		15003177	
R409.2-110ML		16015813	
R409.2-150ML		16021615	
R409.2-220ML		16015681	

Options/Accessories		R409.2-11ML R409.2-17ML	×	R409.2-30ML R409.2-45ML	×	R409.2-72ML R409.2-110ML	×	R409.2-150ML R409.2-220ML	×
Stroke frequency monitoring 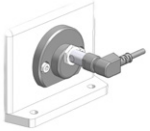	10-60 V DC, three-wire, PNP	▲		▲		▲		▲	
	Namur execution, II2G EExia IICT6 acc. to ATEX95	▲		▲		▲		▲	
Drive motor	Add. price for special drive	▲		▲		▲		▲	
	Special voltage	✆		✆		✆		✆	
	Enclosure IP 65	▲		▲		▲		▲	
	Protective roof for the fan of the drive	▲		▲		▲		▲	
	VIK-design	✆		✆		✆		✆	
	II2G EExe IIT4 (acc. to ATEX95)	▲		▲		▲		▲	
	Single phase AC 230V / 50 Hz with capacitor	▲		▲		▲		▲	
	electrical acc. to uL / CSA	✆		✆		✆		✆	
	Driver for converter operation incl. integrated posistor, 5-50/60Hz	▲		▲		▲		▲	
	Driver for converter operation II2G EExde IICT4, 5-50/60 Hz acc. ATEX 95, incl. integrated posistor	▲		▲		▲		▲	
	■ Please note: If one or several options ‚drive motor' are required to fix the add. price of the drive, the calculation will be as follows: ‚add. price special drive' plus the single options of the drive ■ Additional price and availability must be requested from **sera**								
Stroke length adjustment electrical	**Actuator N C1-BA** 230 V, +/- 10%, 50/60 Hz, 128s/10 U, 1,5 Nm incl. mounting plate for actuator	▲		▲		▲		▲	
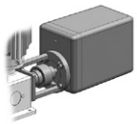	**Electronic positioning controller PMR3** input signal 0/4-20 mA incl. feedback signal 0/4-20 mA (only in N C1-BA integrated)	▲		▲		▲		▲	
	Actuator D30D-10-Ex (II2G EExde IICT4) acc. to ATEX 95, 400 V, 50 Hz, 10 U/min, incl. mounting-kit for actuator and base plate	▲		▲		▲		▲	
	uL / CSA - design	✆		✆		✆		✆	

● = Basis design – = not available ▲ = with add. price ✆ = on request ❍ = without add. price Art.-No. = available in basic design/ accessories

2

© 2015 **sera GmbH**
Subject to technical modifications.

Order information

Basic design

R409.2-11ML up to R409.2-45ML
- Pump body PP
- Double valves PP-FRP
- Valve balls PTFE
- Valve seals FPM
- Multi-layer diaphragm PTFE
- optical diaphragm rupture indicator with manometer

R409.2-72ML up to R409.2-220ML
- Pump body PP
- Single valves PP-FRP
- Valve balls PTFE
- Valve seals FPM
- Multi-layer diaphragm PTFE
- optical diaphragm rupture indicator with manometer

Motor:
- 230/400 V +/- 5% 50 Hz threephase, 460 V star +/- 5% 60 Hz threephase, IP 55, insul. cl. F

Further options and accessories:
- Connection pieces see chapter 4
- Product documentation see chapter 5

Type	Basic design		×
		Art.-no.	
R409.2-11ML		16021612	
R409.2-17ML		16017429	
R409.2-30ML		16021613	
R409.2-45ML		16021614	
R409.2-72ML		15003177	
R409.2-110ML		16015813	
R409.2-150ML		16021615	
R409.2-220ML		16015681	

Options/Accessories			R409.2-11ML R409.2-17ML ×	R409.2-30ML R409.2-45ML ×	R409.2-72ML R409.2-110ML ×	R409.2-150ML R409.2-220ML ×
Stroke frequency adjustment electrical 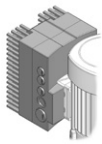	Frequency converter series INVEOR mounted-on, input 4-20mA					
	Single-phase 200-230 V, +/- 10%, 50/60 Hz	0,37 kW	▲	▲	▲	▲
	Three-phase 400-480 V, +/- 10%, 50/60 Hz	0,55 kW	▲	▲	▲	▲
	Service module MMI incl. connection cable		90039445	90039445	90039445	90039445
Stroke frequency adjustment electrical	Frequency converter series 8200 Vector input 4-20mA, incl. Keypad (for integration into control cabinet)					
	Single-phase 230 V, 50/60 Hz	0,37 kW	90017522	90017522	90017522	90017522
	Three-phase 320-550 V, +/- 0%, 50/60 Hz	0,55 kW	90017526	90017526	90017526	90017526
Console 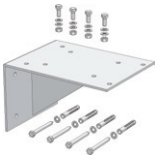	for wall mounting incl. fixing screws	1.4301	90023875	90023875	90023875	90023875
		PP	90023848	90023848	90023848	90023848

● = Basis design – = not available ▲ = with add. price ✆ = on request ❍ = without add. price Art.-No. = available in basic design/ accessories

© 2015 **sera GmbH**
Subject to technical modifications.

Fittings for suction side of dosing pumps		R409.2-11ML R409.2-17ML		R409.2-30ML R409.1-45ML		R409.2-72ML R409.2-110ML		R409.1-150ML		R409.2-220ML	
		Type	p.	Type	p.	Type	p.	Type	p.	Type	p.
Pulsation damper without separating diaphragm	**PVC-U / PP / 1.4571**	✆		✆		✆		✆		✆	
Suction lance	**with level switch 1-stage**	SL-11.1	3.28	SL-02	3.30	SL-02	3.30	SL-02	3.30	SLP-151.1	3.32
	without level switch	S-01	3.34	S-01	3.34	S-01	3.34	S-01	3.34	S-01	3.34
	with level switch 2-stage	SL-12.1	3.28	SL-02	3.30	SL-02	3.30	SL-02	3.30	✆	
Suction aid / Siphon Vessel	**transparent PVC-U**	770.2	3.54	770.2	3.54	770.2	3.54	770.2	3.54	770.2	3.54
Calibration Pot	**PVC-U**	792.1	3.56	793.1	3.56	793.1	3.56	793.1	3.56	794.1	3.56
Foot valve	**PVC-U**	731	3.60	731	3.60	732.3	3.58	732.3	3.58	732.3	3.58
	PP / PVDF	✆		✆		732	3.60	732	3.60	732	3.60
	1.4571	731	3.60	731	3.60	732	3.60	732	3.60	732	3.60
	PP-FRP / PVDF-FRP	781.1	3.64	781.1	3.64	✆		✆		783.1	3.64
Line strainer	**PVC-U / PP / PVDF / 1.4408**	✆		✆		✆		✆		✆	

Fittings for pressure side of dosing pumps		R409.2-11ML R409.2-17ML		R409.2-30ML R409.1-45ML		R409.2-72ML R409.2-115ML		R409.1-140ML		R409.2-220ML	
		Type	p.	Type	p.	Type	p.	Type	p.	Type	p.
Diaphragm-type relief valve		620.10	3.4	620.10	3.4	622.10	3.4	622.10	3.4	622.10	3.4
Diaphragm-type pressure keeping valve		620.D	3.6	620.D	3.6	622.D	3.6	622.D	3.6	622.D	3.6
Multi-function valve	**4 bar opening pressure**	MFV 05004	3.8	–		–		–		–	
	6 bar opening pressure	MFV 05006	3.8	–		–		–		–	
	10 bar opening pressure	MFV 05010	3.8	–		–		–		–	
Pulsation damper without separating diaphragm	**PVC-U / PP / 1.4571**	✆		✆		✆		✆		✆	
Diaphragm-pulsation damper with PTFE/PTFE-faced diaphragm	**PVC-U / PP / PVDF**	720.1	3.16	721.2	3.16	722.1	3.16	722.1	3.16	722.1	3.16
	1.4571	721.1	3.20	721.1	3.20	722.1	3.20	722.1	3.20	722.1	3.20
Diaphragm-pulsation damper with Elastomer-diaphragm	**1.4571**	810.1-0,16/...	3.22	810.1-0,16/...	3.22	810.1-0,32/...	3.22	810.1-0,32/...	3.22	810.1-0,75/...	3.22
Check valve	**PP-FRP / PVDF-FRP**	✆		✆		✆		✆		✆	
	PVC-U	✆		✆		✆		✆		✆	
	1.4571	✆		✆		✆		✆		✆	
Dosing valve	**PP-FRP / PVDF-FRP**	691.1	3.40	691.1	3.40	691.1	3.40	693.1	3.40	693.1	3.40
	1.4571	691.1	3.40	691.1	3.40	691.1	3.40	692.1	3.40	692.1	3.40
	PVC-U	691.1	3.40	691.1	3.40	691.1	3.40	–		–	
	PVC-U / PP / PVDF	681.1	3.44	681.1	3.44	681.1	3.44	682.1	3.44	682.1	3.44

The above allocation considers the fittings which have to be used at least regarding their nominal width in order to ensure the safe and trouble-free operation of the respective pumps when feeding liquids which are resembling to water.
Absolutely note the max. admissible operating pressure of the fittings.
The use of fittings of a bigger nominal width is unproblematically possible in most cases.
When choosing the fittings note the installation instructions for dosing pumps or confer with **sera**

© 2015 **sera GmbH**
Subject to technical modifications.

R410.2-...ML in survey

- Multi-layer diaphragm technology
- Compact design
- Safe to run dry
- Leakage free
- Low maintenance
- Easy to use
- High dosing accuracy
- Integrable into automatic processes
- Manual stroke length adjustment
- Robust metallic housing

Infobox

Order information	Page 2.90
Options/accessories	Page 2.90
Fittings-allocation	Page 2.93
Connecting pieces	Chapter 4
Resistance chart	Chapter 5
Installation examples	Chapter 5

2

Technical data

Type	Nominal capacity				Nominal stroke frequency		Capacity per stroke	Admissible Counterpressure	
	50 Hz		60 Hz		50 Hz	60 Hz			
	l/h	gal/h	l/h	gal/h	1/min	1/min	ml/stroke	bar	psi
R410.2-55ML	0 - 55	0 - 14,19	0 - 66	0 - 17,03	76	92	12	16	232
R410.2-70ML	0 - 70	0 - 18,06	0 - 84	0 - 21,68	97	116	12	16	232
R410.2-105ML	0 - 105	0 - 27,09	0 - 126	0 - 32,51	76	92	23	15	217,5
R410.2-135ML	0 - 135	0 - 35,84	0 - 162	0 - 41,80	97	116	23	15	217,5
R410.2-400ML	0 - 400	0 - 103,22	0 - 480	0 - 123,86	76	92	87	10	145
R410.2-500ML	0 - 500	0 - 129,02	0 - 600	0 - 154,82	97	116	85	10	145
R410.2-940ML	0 - 940	0 - 242,56	0 - 1.128	0 - 291,07	76	92	206	5	72,5
R410.2-1200ML	0 - 1.200	0 - 309,65	–	–	97	–	206	5	72,5

- Note: The admissible counterpressure is 10 bar (145 psi) or lower when plastic pump bodies are used

Type	Admissible pressure at pump inlet		Max. Suction height	Inlet/ Outlet nominal width	Max. stroke length		Motor output
	bar	psi	mWC	DN	mm	in	kW
R410.2-55ML	-0,3 / 0	-4,3 / 0	3	10	8	0,31	0,75
R410.2-70ML	-0,3 / 0	-4,3 / 0	3	15	8	0,31	0,75
R410.2-105ML	-0,3 / 0	-4,3 / 0	3	15	10	0,39	0,75
R410.2-135ML	-0,3 / 0	-4,3 / 0	3	15	10	0,39	0,75
R410.2-400ML	-0,3 / 0	-4,3 / 0	3	15	13	0,51	0,75
R410.2-500ML	-0,3 / 0	-4,3 / 0	3	15	13	0,51	0,75
R410.2-940ML	-0,3 / 0	-4,3 / 0	3	20	20	0,79	1,5
R410.2-1200ML	-0,3 / 0	-4,3 / 0	3	20	20	0,79	1,5

© 2015 sera GmbH
Subject to technical modifications.

Dimensional drawing

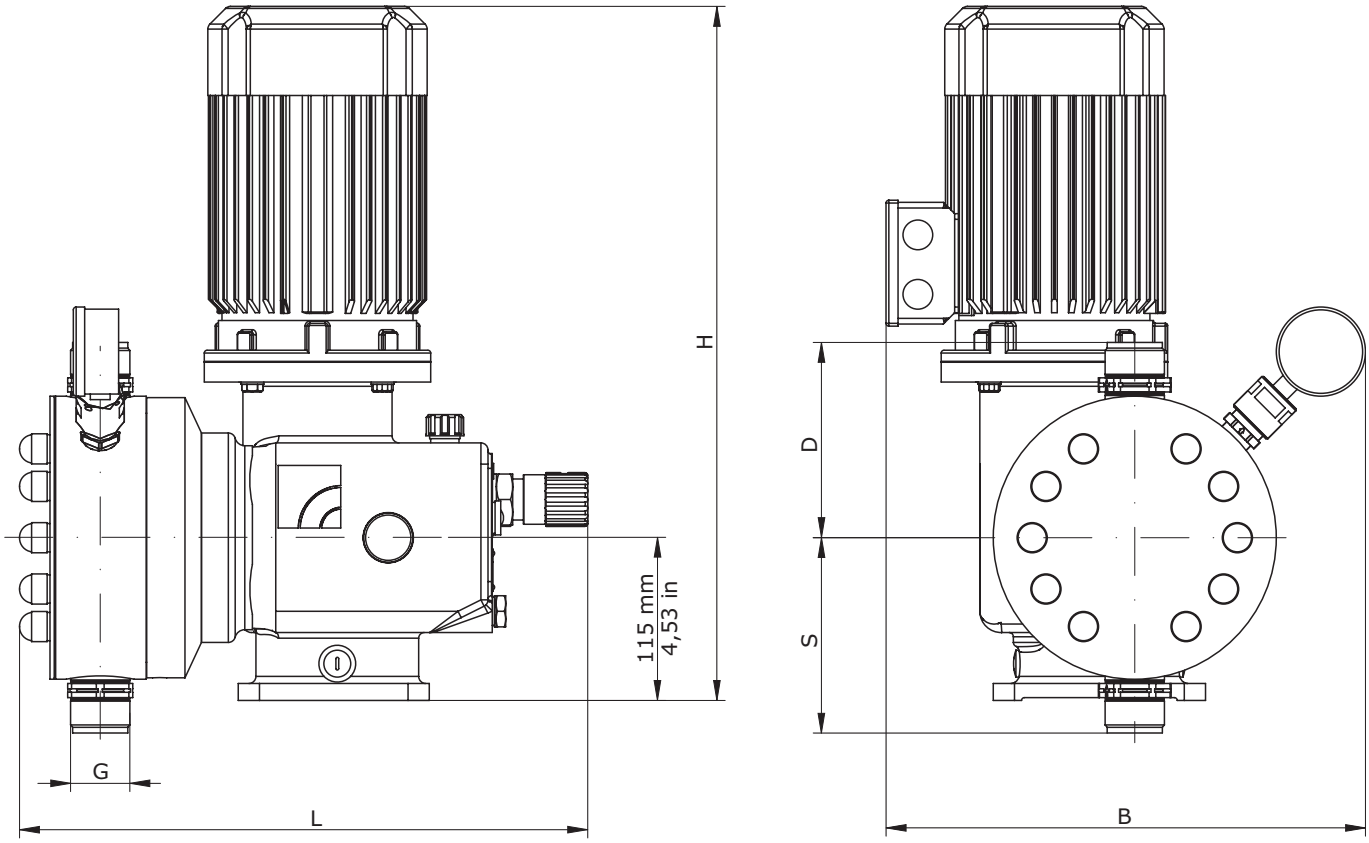

Dimensional chart

Indications in mm / inch

Type	G	S		D	
		mm	in	mm	in
R410.2-55ML	G 3/4	113	4,45	113	4,45
R410.2-70ML	G 3/4	113	4,45	113	4,45
R410.2-105ML	G 1 1/4	127	5	127	5
R410.2-135ML	G 1 1/4	127	5	127	5
R410.2-400ML	G 1 1/4	138	5,43	138	5,43
R410.2-500ML	G 1 1/4	138	5,43	138	5,43
R410.2-940ML	G 1 1/4	162	6,38	162	6,38
R410.2-1200ML	G 1 1/4	162	6,38	162	6,38

Type	L		B		H		Weight
	mm	in	mm	in	mm	in	kg
R410.2-55ML	408	16,06	317	12,48	490	19,29	29
R410.2-70ML	408	16,06	317	12,48	490	19,29	29
R410.2-105ML	425	16,73	331	13,03	490	19,29	32
R410.2-135ML	425	16,73	331	13,03	490	19,29	32
R410.2-400ML	413	16,26	339	13,35	490	19,29	34
R410.2-500ML	413	16,26	339	13,35	490	19,29	34
R410.2-940ML	457	17,99	355	13,98	525	20,67	39
R410.2-1200ML	457	17,99	355	13,98	525	20,67	39

■ Indication of weight for basic design acc. to order information

© 2015 **sera GmbH**
Subject to technical modifications.

Order information

Basic design

R410.2-...ML

- Pump body PP
- Single valve PP-FRP
- Valve balls PTFE
- Valve seals FPM
- Working diaphragm PTFE
- Optical diaphragm rupture indicator with manometer

Motor:

- 230/400 V +/- 5% 50 Hz threephase, 460 V star +/- 5% 60 Hz threephase, IP 55, insul. cl. F

Further options and accessories:

- Connection pieces see chapter 4
- Product documentation see chapter 5

Type	Basic design		×
		Art.-no.	
R410.2-55ML		16021616	
R410.2-70ML		16021617	
R410.2-105ML		16021618	
R410.2-135ML		16016912	
R410.2-400ML		16021619	
R410.2-500ML		16021295	
R410.2-940ML		16017781	
R410.2-1200ML		16021620	

Options/Accessories			R410.2-55ML R410.2-70ML	×	R410.2-105ML R410.2-135ML	×	R410.2-400ML R410.2-500ML	×	R410.2-940ML R410.2-1200ML	×
Pump body and valves	PP	single valves PP-FRP	●		●		●		●	
	PVC-U	single valves PVC-U	▲		▲		▲		▲	
	PVDF	single valves PVDF-FRP	▲		▲		▲		▲	
	1.4571	single valves 1.4571/1.4581	–		▲		▲		▲	
		double valves 1.4571/1.4581	▲		–		–		–	
Valve balls 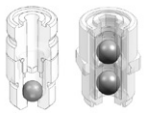	PTFE	single valves	●		●		●		●	
		double valves	▲		–		–		–	
	1.4401	single valves	❍		❍		❍		❍	
		double valves	❍		–		–		–	
Valve sealings	FPM	single valves	●		●		●		●	
		double valves	❍		–		–		–	
	EPDM	single valves	❍		❍		❍		❍	
		double valves	❍		–		–		–	
	FEP-covered	single valves	▲		▲		▲		▲	
		double valves	▲		–		–		–	
Diaphragm monitoring	optical diaphragm rupture indicator with manometer		●		●		●		●	
	Pressure switch IP 65		▲		▲		▲		▲	
	Pressure switch II2G EExd IIC T5 or T6 acc. to ATEX95		▲		▲		▲		▲	
Stroke length adjustment	with position indicator		▲		▲		▲		▲	

● = Basis design – = not available ▲ = with add. price ✆ = on request ❍ = without add. price Art.-No. = available in basic design/ accessories

© 2015 sera GmbH
Subject to technical modifications.

Order information

Basic design

R410.2-...ML

- Pump body PP
- Single valve PP-FRP
- Valve balls PTFE
- Valve seals FPM
- Working diaphragm PTFE
- Optical diaphragm rupture indicator with manometer

Motor:

- 230/400 V +/- 5% 50 Hz threephase, 460 V star +/- 5% 60 Hz threephase, IP 55, insul. cl. F

Further options and accessories:

- Connection pieces see chapter 4
- Product documentation see chapter 5

Type	Basic design		×
		Art.-no.	
R410.2-55ML		16021616	
R410.2-70ML		16021617	
R410.2-105ML		16021618	
R410.2-135ML		16016912	
R410.2-400ML		16021619	
R410.2-500ML		16021295	
R410.2-940ML		16017781	
R410.2-1200ML		16021620	

Options/Accessories		R410.2-55ML R410.2-70ML	×	R410.2-105ML R410.2-135ML	×	R410.2-400ML R410.2-500ML	×	R410.2-940ML R410.2-1200ML	×
Stroke frequency monitoring 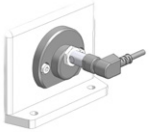	10-60 V DC, three-wire, PNP	▲		▲		▲		▲	
	Namur execution, II2G EExia IICT6 acc. to ATEX95	▲		▲		▲		▲	
Drive motor	Add. price for special drive	▲		▲		▲		▲	
	Special voltage	✆		✆		✆		✆	
	Enclosure IP 65	▲		▲		▲		▲	
	Protective roof for the fan of the drive	▲		▲		▲		▲	
	VIK-design	✆		✆		✆		✆	
	II2G EExe IIT4 (acc. to ATEX95)	▲		▲		▲		▲	
	Single phase AC 230V / 50 Hz with capacitor	▲		▲		▲		▲	
	electrical acc. to uL / CSA	✆		✆		✆		✆	
	Driver for converter operation incl. integrated posistor, 5-50/60Hz	▲		▲		▲		▲	
	Driver for converter operation II2G EExde IICT4, 5-50/60 Hz acc. ATEX 95, incl. integrated posistor	▲		▲		▲		▲	
	■ Please note: If one or several options ‚drive motor' are required to fix the add. price of the drive, the calculation will be as follows: ‚add. price special drive' plus the single options of the drive ■ Additional price and availability must be requested from **sera**								
Stroke length adjustment electrical 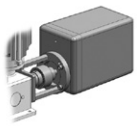	**Actuator N1S** 230 V, 50/60 Hz, 128s/10 U, 15 Nm Potentiometer 1 kOhm incl. mounting kit for actuator	▲		▲		▲		▲	
	Electronic positioning controller PMR3 input signal 0/4-20 mA incl. feedback signal 0/4-20 mA (integrated in N1S)	▲		▲		▲		▲	
	Actuator D30D-10-Ex (II2G EExde IICT4) acc. to ATEX 95, 400 V, 50 Hz, 10 U/min, incl. mounting-kit for actuator and base plate	▲		▲		▲		▲	
	uL / CSA - design	✆		✆		✆		✆	

● = Basis design – = not available ▲ = with add. price ✆ = on request ❍ = without add. price Art.-No. = available in basic design/ accessories

2

© 2015 **sera GmbH**
Subject to technical modifications.

Order information

Basic design

R410.2-...ML

- Pump body PP
- Single valve PP-FRP
- Valve balls PTFE
- Valve seals FPM
- Working diaphragm PTFE
- Optical diaphragm rupture indicator with manometer

Motor:

- 230/400 V +/- 5% 50 Hz threephase, 460 V star +/- 5% 60 Hz threephase, IP 55, insul. cl. F

Further options and accessories:

- Connection pieces see chapter 4
- Product documentation see chapter 5

Type	Basic design		×
		Art.-no.	
R410.2-55ML		16021616	
R410.2-70ML		16021617	
R410.2-105ML		16021618	
R410.2-135ML		16016912	
R410.2-400ML		16021619	
R410.2-500ML		16021295	
R410.2-940ML		16017781	
R410.2-1200ML		16021620	

Options/Accessories			R410.2-55ML R410.2-70ML ×	R410.2-105ML R410.2-135ML ×	R410.2-400ML R410.2-500ML ×	R410.2-940ML R410.2-1200ML ×
Stroke frequency adjustment electrical 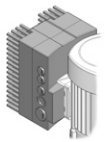	Frequency converter series INVEOR mounted-on, input 4-20mA					
	Three-phase 400-480 V, +/- 0%, 50/60 Hz	0,75 kW	▲	▲	–	–
		1,5 kW	–	–	▲	▲
	Service module MMI incl. connection cable		90039445	90039445	90039445	90039445
Stroke frequency adjustment electrical	Frequency converter series 8200 Vector input 4-20mA, incl. Keypad (for integration into control cabinet)					
	Single-phase 230 V, 50/60 Hz	0,75 kW	90017524	90017524	90017524	–
		1,5 kW	–	–	–	90016865
	Three-phase 320-550 V, +/- 0%, 50/60 Hz	0,75 kW	90017527	90017527	90017527	–
		1,5 kW	–	–	–	90017528
Console 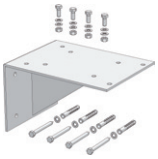	for wall mounting incl. fixing screws	1.4301	90023876	90023876	90023876	90023876
		PP	90023849	90023849	90023849	90023849

● = Basis design – = not available ▲ = with add. price ✆ = on request ❍ = without add. price Art.-No. = available in basic design/ accessories

© 2015 **sera GmbH**
Subject to technical modifications.

Fittings for suction side of dosing pumps		R410.2-55ML		R410.2-70ML		R410.2-105ML		R410.2-135ML		R410.2-400ML R410.2-500ML		R410.2-940ML		R410.2-1200ML	
		Type	p.	Type	p.	Type	p.	Type	p.	Type	p.	Type	p.	Type	p.
Pulsation damper without separating diaphragm	**PVC-U / PP / 1.4571**	✆		✆		✆		✆		✆		✆		✆	
Suction lance	**with level switch 1-stage**	SL-02	3.30	SL-02	3.30	✆		✆		SLP-151.1	3.32	–		–	
	without level switch	S-01	3.34	S-01	3.34	S-01	3.34	S-01	3.34	S-01	3.34	S-01	3.34	S-01	3.34
Suction aid / Siphon Vessel	**transparent PVC-U**	770.2	3.54	770.2	3.54	770.2	3.54	770.2	3.54	770.2	3.54	771.2	3.54	772.2	3.54
Calibration Pot	**PVC-U**	792.1	3.56	792.1	3.56	792.1	3.56	794.1	3.56	795.1	3.56	796.1	3.56	796.1	3.56
Foot valve	**PVC-U**	731	3.60	731	3.60	732.3	3.58	732.3	3.58	732.3	3.58	733.3	3.58	733.3	3.58
	PP / PVDF	–		–		732	3.60	732	3.60	732	3.60	733	3.60	733	3.60
	1.4571	731	3.60	731	3.60	732	3.60	732	3.60	732	3.60	733	3.60	733	3.60
	PP-FRP / PVDF-FRP	781.1	3.64	781.1	3.64	783.1	3.64	783.1	3.64	783.1	3.64	783.1	3.64	783.1	3.64
Line strainer	**PVC-U / PP / PVDF**	✆		✆		✆		✆		✆		✆		✆	
	1.4408	✆		✆		✆		✆		✆		✆		✆	

Fittings for pressure side of dosing pumps		R410.2-55ML		R410.2-70ML		R410.2-105ML		R410.2-135ML		R410.2-400ML R410.2-500ML		R410.2-940ML		R410.2-1200ML	
		Type	p.	Type	p.	Type	p.	Type	p.	Type	p.	Type	p.	Type	p.
Diaphragm-type relief valve		620.10	3.4	620.10	3.4	622.10	3.4	622.10	3.4	622.10	3.4	623.10	3.4	623.10	3.4
Diaphragm-type pressure keeping valve		620.D	3.6	620.D	3.6	622.D	3.6	622.D	3.6	622.D	3.6	623.D	3.6	623.D	3.6
Pulsation damper without separating diaphragm	**PVC-U / PP / 1.4571**	✆		✆		✆		✆		✆		✆		✆	
Diaphragm-pulsation damper with PTFE/PTFE-faced diaphragm	**PVC-U / PP / PVDF**	721.2	3.16	722.1	3.16	722.1	3.16	722.1	3.16	✆		–		–	
	1.4571	721.1	3.20	722.1	3.20	722.1	3.20	722.1	3.20	✆		–		–	
Diaphragm-pulsation damper with Elastomer-diaphragm	**1.4571**	810.1-0,16/...	3.22	810.1-0,32/...	3.22	810.1-0,32/...	3.22	810.1-0,32/...	3.22	810.1-2,0/...	3.22	810.1-2,0/...	3.22	713.1	3.20
	PVC-U / PP / PVDF	✆		✆		✆		✆		713.1	3.12	713.1	3.12	713.1	3.12
Check valve	**PP-FRP / PVDF-FRP**	✆		✆		✆		✆		✆		✆		✆	
	1.4571	✆		✆		✆		✆		✆		✆		✆	
	PVC-U	✆		✆		–		–		–		–		–	
Dosing valve	**PP-FRP / PVDF-FRP**	691.1	3.40	691.1	3.40	693.1	3.40	693.1	3.40	693.1	3.40	693.1	3.40	693.1	3.40
	1.4571	691.1	3.40	691.1	3.40	692.1	3.40	692.1	3.40	692.1	3.40	693.1	3.40	693.1	3.40
	PVC-U / PP / PVDF	681.1	3.44	681.1	3.44	682.1	3.44	682.1	3.44	682.1	3.44	683.1	3.44	684.1	3.44
	PVC-U	691.1	3.40	691.1	3.40	–		–		–		–		–	
Injection fitting	**PVC-U / PP / PVDF**	8061.1	3.46	8061.1	3.46	8062.1	3.46	8062.1	3.46	8062.1	3.46	8063.1	3.46	8063.1	3.46

The above allocation considers the fittings which have to be used at least regarding their nominal width in order to ensure the safe and trouble-free operation of the respective pumps when feeding liquids which are resembling to water.
Absolutely note the max. admissible operating pressure of the fittings.
The use of fittings of a bigger nominal width is unproblematically possible in most cases.
When choosing the fittings note the installation instructions for dosing pumps or confer with **sera**.

© 2015 **sera GmbH**
Subject to technical modifications.

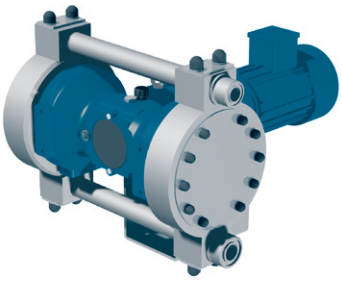

ZX411.3 in survey

- Leakage free
- Safe to run dry
- High quality materials
- Low maintenance
- Low operating costs
- Integrable into automatic processes
- Robust metallic housing
- Easy to use
- Manuell stroke frequency adjustment (only ZXRI-Types)

Infobox

Order information	Page 2.96
Options/accessories	Page 2.96
Fittings-allocation	Page 2.98
Connecting pieces	Chapter 4
Resistance chart	Chapter 5
Installation examples	Chapter 5

2

Technical data

Type	Nominal capacity				Nominal stroke frequency		Admissible Counterpressure	
	50 Hz		60 Hz		50 Hz	60 Hz		
	l/h	gal/h	l/h	gal/h	1/min	1/min	bar	psi
ZXM411.3-2200e	2.200	581,18	2.640	697,41	92	110	4	58
ZXRI411.3-2200e	230 - 2.200	60,76 - 581,18	–	–	84	–	4	58
ZXM411.3-2600e	2.600	686,85	3.120	824,22	103	123	4	58
ZXRI411.3-2600e	230 - 2.600	60,76 - 686,85	–	–	110	110	4	58
ZXM411.3-3100e	3.100	818,93	–	–	128	–	4	58
ZXRI411.3-3100e	230 - 3.100	60,76 - 818,93	–	–	123	123	4	58

Type	Admissible pressure at pump inlet		Max. Suction height	Inlet nominal width	Outlet nominal width	Max. stroke length		Motor output
	bar	psi	mWC	DN	DN	mm	in	kW
ZXM411.3-2200e	-0,8 / 0	-11,6 / 0	8	32	25	20	0,79	0,75
ZXRI411.3-2200e	-0,8 / 0	-11,6 / 0	8	32	25	20	0,79	0,75
ZXM411.3-2600e	-0,8 / 0	-11,6 / 0	8	32	25	20	0,79	0,75
ZXRI411.3-2600e	-0,8 / 0	-11,6 / 0	8	32	25	20	0,79	0,75
ZXM411.3-3100e	-0,8 / 0	-11,6 / 0	8	32	25	20	0,79	0,75
ZXRI411.3-3100e	-0,8 / 0	-11,6 / 0	8	32	25	20	0,79	0,75

- RI in type designation means: pump with integrated frequency converter

© 2015 **sera GmbH**
Subject to technical modifications.

Dimensional drawing

ZXM411.3-...

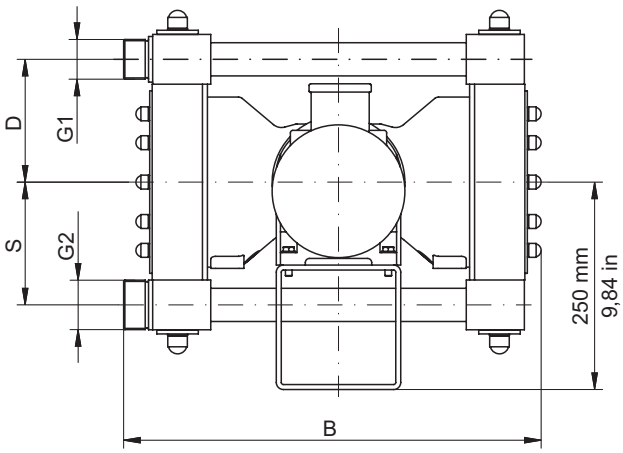

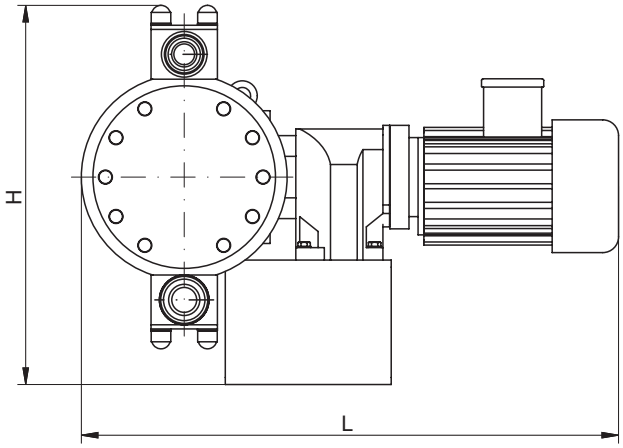

ZXRI411.3-...

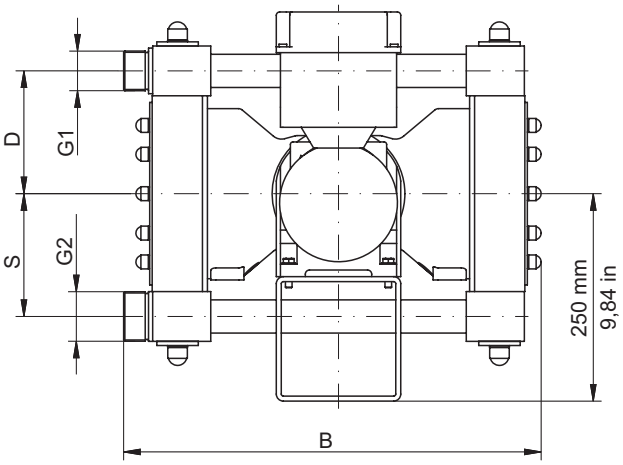

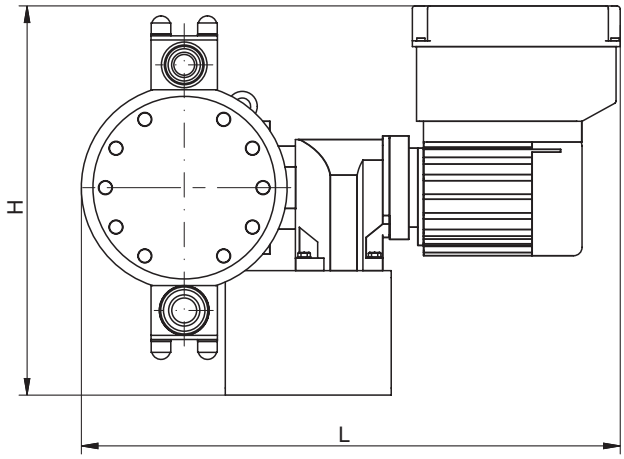

Dimensional chart

Indications in mm / inch

Type	G2	G1	S		D	
			mm	in	mm	in
ZXM411.3-2200e	G 2	G 1 1/2	148	5,83	148	5,83
ZXRI411.3-2200e	G 2	G 1 1/2	148	5,83	148	5,83
ZXM411.3-2600e	G 2	G 1 1/2	148	5,83	148	5,83
ZXRI411.3-2600e	G 2	G 1 1/2	148	5,83	148	5,83
ZXM411.3-3100e	G 2	G 1 1/2	148	5,83	148	5,83
ZXRI411.3-3100e	G 2	G 1 1/2	148	5,83	148	5,83

Type	L		B		H		Weight
	mm	in	mm	in	mm	in	kg
ZXM411.3-2200e	580	22,83	500	19,69	450	17,72	70
ZXRI411.3-2200e	650	25,59	500	19,69	450	17,72	80
ZXM411.3-2600e	580	22,83	500	19,69	450	17,72	70
ZXRI411.3-2600e	650	25,59	500	19,69	450	17,72	80
ZXM411.3-3100e	580	22,83	500	19,69	450	17,72	70
ZXRI411.3-3100e	650	25,59	500	19,69	450	17,72	80

■ Indication of weight for basic desgign acc. to order information

© 2015 **sera GmbH**
Subject to technical modifications.

Order information

Basic design

ZX...411.3
- Pump body PP
- Single valves PP/PP-FRP
- Valve balls PTFE
- Valve seals FPM
- Working diaphragms PTFE-faced

Motor:
- 230/400 V threephase, 50/60 Hz, IP 55, insul. cl. F

Further options and accessories:
- Connection pieces see chapter 4
- Product documentation see chapter 5

Type	Basic design		×
		Art.-no.	
ZXM411.3-2200e		16010329	
ZXRI411.3-2200e		16010596	
ZXM411.3-2600e		16021621	
ZXRI411.3-2600e		16021622	
ZXM411.3-3100e		16009886	
ZXRI411.3-3100e		16017716	

2

Options/Accessories			ZXM411.3-2200e ZXM411.3-2600e ZXM411.3-3100e	×	ZXRI411.3-2200e ZXRI411.3-2600e ZXRI411.3-3100e	×
Pump body and valves 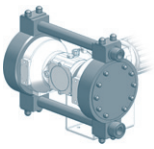	PP	single valves PP/PP-FRP	●		●	
	PVC-U	single valves PVC/PVDF-FRP	❍		❍	
		single valves PVC-U	▲		▲	
	PVDF	single valves PVDF/PVDF-FRP	▲		▲	
	1.4571	single valves 1.4571/1.4581	▲		▲	
Valve balls 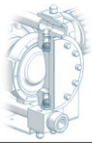	PTFE	single valves	●		●	
	1.4401	single valves	❍		❍	
Valve sealings	FPM	single valves	●		●	
	EPDM	single valves	❍		❍	
	FEP-covered	single valves	▲		▲	
	■ The additional price FEP-covvered is only valid with a punp body made of 1.4571. ■ At all other pump body materials is this additional price only available on request.					
Working diaphragms 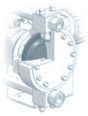	PTFE-faced		●		●	
Diaphragm monitoring 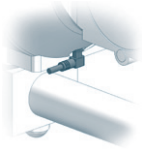	Diaphragm rupture electrode conductive, mounted to pump					
	MBE-02		▲		▲	

● = Basis design – = not available ▲ = with add. price ✆ = on request ❍ = without add. price Art.-No. = available in basic design/ accessories

© 2015 **sera GmbH**
Subject to technical modifications.

Order information

Basic design

ZX...411.3

- Pump body PP
- Single valves PP/PP-FRP
- Valve balls PTFE
- Valve seals FPM
- Working diaphragms PTFE-faced

Motor:

- 230/400 V threephase, 50/60 Hz, IP 55, insul. cl. F

Further options and accessories:

- Connection pieces see chapter 4
- Product documentation see chapter 5

Type	Basic design		×
		Art.-no.	
ZXM411.3-2200e		16010329	
ZXRI411.3-2200e		16010596	
ZXM411.3-2600e		16021621	
ZXRI411.3-2600e		16021622	
ZXM411.3-3100e		16009886	
ZXRI411.3-3100e		16017716	

Options/Accessories			ZXM411.3-2200e ZXM411.3-2600e ZXM411.3-3100e	×	ZXRI411.3-2200e ZXRI411.3-2600e ZXRI411.3-3100e	×
Diaphragm monitoring	Electrode relay, control cabinet assembly					
	ER-104	aux. energy 230 V AC	90022944		90022944	
		aux. energy 24 V DC	90022945		90022945	
	ER-142	aux. energy 230 V AC II(1)G [EExia] IIC acc. to ATEX 95	90200363		90200363	
Stroke frequency monitoring 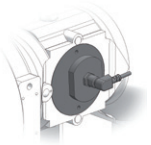	Inductive contact					
	10-60 V DC, three-wire, PNP		▲		▲	
	Namur execution, II2G EExia IICT6 acc. to ATEX95		▲		▲	
Drive motor 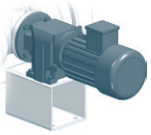	Special voltage		✆		✆	
	Enclosure IP 65		▲		✆	
	Protective roof for the fan of the drive		▲		✆	
	VIK-design		▲		✆	
	II2G EExe IIT3 (acc. to ATEX95)		▲		–	
	II2G EExe IIT4 (acc. to ATEX95)		✆		–	
	Driver for converter operation incl. integrated posistor, 5-50/60Hz		▲		●	
	Driver for converter operation II2G EExde IICT4, 5-50/60 Hz acc. ATEX 95, incl. integrated posistor		✆		–	
Stroke frequency adjustment electrical	Frequency converter series 8200 Vector input 4-20mA, incl. Keypad (for integration into control cabinet)					
	Single-phase 230 V, 50/60 Hz	1,5 kW	90016865		–	
	Three-phase 320-550 V, +/- 0%, 50/60 Hz	1,5 kW	90017528		–	

● = Basis design – = not available ▲ = with add. price ✆ = on request ❍ = without add. price Art.-No. = available in basic design/ accessories

2

© 2015 **sera GmbH**
Subject to technical modifications.

Fittings for suction side of dosing pumps		ZXM411.3-2200e up to ZXRI411.3-3100e	
		Type	p.
Pulsation damper without separating diaphragm	**PVC-U / PP / 1.4571**	✆	
Suction aid / Siphon Vessel	**transparent PVC-U**	772.2	3.54
Calibration Pot	**PVC-U**	797.1	3.56
Foot valve	**PVC-U**	735.3	3.58
	PP / PVDF	735	3.60
	1.4571	735	3.60
Line strainer	**PVC-U / PP / PVDF / 1.4408**	✆	

Fittings for pressure side of dosing pumps		ZXM411.3-2200e up to ZXRI411.3-3100e	
		Type	p.
Diaphragm-type relief valve		624.10	3.4
Diaphragm-type pressure keeping valve		624.D	3.8
Pulsation damper without separating diaphragm	**PVC-U / PP / 1.4571**	✆	
Diaphragm-pulsation damper with Elastomer-diaphragm	**PVC-U / PP / PVDF**	713.1	3.12
	1.4571	713.1	3.14
Dosing valve	**PVC-U / PP / PVDF**	684.1	3.44

The above allocation considers the fittings which have to be used at least regarding their nominal width in order to ensure the safe and trouble-free operation of the respective pumps when feeding liquids which are resembling to water.

Absolutely note the max. admissible operating pressure of the fittings.

The use of fittings of a bigger nominal width is unproblematically possible in most cases.

When choosing the fittings note the installation instructions for dosing pumps or confer with **sera**

© 2015 **sera GmbH**
Subject to technical modifications.

© 2015 **sera GmbH**
Subject to technical modifications.

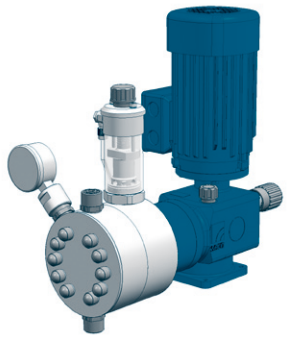

R409.2-...KM in survey

- Multi-layer diaphragm technology
- High dosing accuracy
- Safe to run dry
- High quality materials
- Leakage free
- Low maintenance
- Easy to use
- Integrateable in automatic processes
- Manual stroke length adjustment
- Robust metallic housing

Infobox

Order information Page 2.102
Options/accessories Page 2.102
Fittings-allocation Page 2.105
Connecting pieces Chapter 4
Resistance chart Chapter 5
Installation examples Chapter 5

2

Technical data

Type	Nominal capacity 50 Hz l/h	Nominal capacity 50 Hz gal/h	Nominal capacity 60 Hz l/h	Nominal capacity 60 Hz gal/h	Nominal stroke frequency 50 Hz 1/min	Nominal stroke frequency 60 Hz 1/min	Capacity per stroke ml/stroke	Admissible Counterpressure bar	Admissible Counterpressure psi
R409.2-7,5KM	0 - 7,5	0 - 1,98	0 - 9	0 - 2,38	100	120	1,25	80	1.160
R409.2-10KM	0 - 10	0 - 2,64	0 - 12	0 - 3,17	150	180	1,1	80	1.160
R409.2-12KM	0 - 12	0 - 3,17	0 - 14,4	0 - 3,80	100	120	2	70	1.015
R409.2-18KM	0 - 18	0 - 4,76	0 - 21	0 - 5,55	150	180	2	70	1.015
R409.2-30KM	0 - 30	0 - 7,93	0 - 36	0 - 9,51	100	120	5	35	507,5
R409.2-45KM	0 - 45	0 - 11,89	0 - 54	0 - 14,27	150	180	5	35	507,5
R409.2-70KM	0 - 70	0 - 18,49	0 - 84	0 - 22,19	100	120	11,6	20	290
R409.2-95KM	0 - 95	0 - 25,10	0 - 114	0 - 30,12	150	180	10,6	20	290
R409.2-135KM	0 - 135	0 - 35,66	0 - 162	0 - 42,80	100	120	22,5	10	145
R409.2-190KM	0 - 190	0 - 50,19	–	–	150	–	21,1	10	145

- Note: The admissible counterpressure is 10 bar (145 psi) when plastic pump bodies are used

Type	Admissible pressure at pump inlet bar	Admissible pressure at pump inlet psi	Max. Suction height mWC	Inlet/ Outlet nominal width DN	Max. Stroke length mm	Max. Stroke length in	Motor output kW
R409.2-7,5KM	-0,2 / 0	-2,9 / 0	2	10	10	0,39	0,37
R409.2-10KM	-0,2 / 0	-2,9 / 0	2	10	10	0,39	0,37
R409.2-12KM	-0,2 / 0	-2,9 / 0	2	10	10	0,39	0,37
R409.2-18KM	-0,2 / 0	-2,9 / 0	2	10	10	0,39	0,37
R409.2-30KM	-0,3 / 0	-4,3 / 0	3	10	10	0,39	0,37
R409.2-45KM	-0,3 / 0	-4,3 / 0	3	10	10	0,39	0,37
R409.2-70KM	-0,3 / 0	-4,3 / 0	3	15	10	0,39	0,37
R409.2-95KM	-0,3 / 0	-4,3 / 0	3	15	10	0,39	0,37
R409.2-135KM	-0,3 / 0	-4,3 / 0	3	15	10	0,39	0,37
R409.2-190KM	-0,3 / 0	-4,3 / 0	3	15	10	0,39	0,37

© 2015 sera GmbH
Subject to technical modifications.

Dimensional drawing

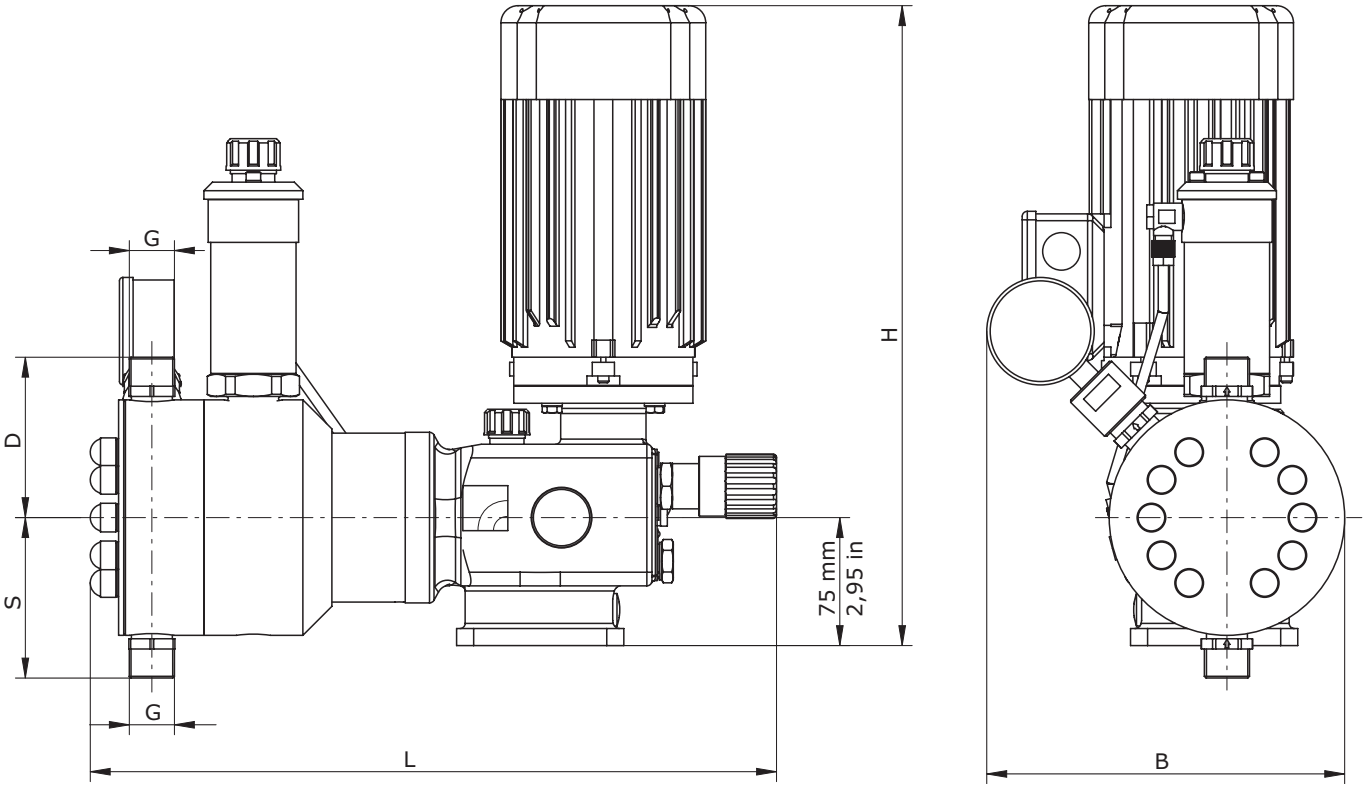

Dimensional chart

Indications in mm / inch

Type	G	S		D	
		mm	in	mm	in
R409.2-7,5KM	G 3/4	83	3,27	83	3,27
R409.2-10KM	G 3/4	83	3,27	83	3,27
R409.2-12KM	G 3/4	83	3,27	83	3,27
R409.2-18KM	G 3/4	83	3,27	83	3,27
R409.2-30KM	G 3/4	95	3,74	95	3,74
R409.2-45KM	G 3/4	95	3,74	95	3,74
R409.2-70KM	G 3/4	96	3,78	95	3,74
R409.2-95KM	G 3/4	96	3,78	95	3,74
R409.2-135KM	G 3/4	95	3,74	95	3,74
R409.2-190KM	G 3/4	95	3,74	95	3,74

Type	L		B		H		Weight
	mm	in	mm	in	mm	in	kg
R409.2-7,5KM	360	14,17	190	7,48	376	14,8	13,5
R409.2-10KM	360	14,17	190	7,48	376	14,8	13,5
R409.2-12KM	360	14,17	190	7,48	376	14,8	13,5
R409.2-18KM	360	14,17	190	7,48	376	14,8	13,5
R409.2-30KM	403	15,87	210	8,27	376	14,8	16,4
R409.2-45KM	403	15,87	210	8,27	376	14,8	16,4
R409.2-70KM	403	15,87	210	8,27	376	14,8	16,4
R409.2-95KM	403	15,87	210	8,27	376	14,8	16,4
R409.2-135KM	403	15,87	210	8,27	376	14,8	16,4
R409.2-190KM	403	15,87	210	8,27	376	14,8	16,4

■ Indication of weight for basic design acc. to order information

© 2015 **sera GmbH**
Subject to technical modifications.

Order information

Basic design

R409.2-7,5KM up to R409.2-45KM
- Pump body PP
- Double valves PP-FRP
- Valve balls PTFE
- Valve seals FPM
- Multi-layer diaphragm PTFE
- Optical diaphragm rupture indication with manometer

R409.2-70KM up to R409.2-190KM
- Pump body PP
- Single valves PP-FRP
- Valve balls PTFE
- Valve seals FPM
- Multi-layer diaphragm PTFE
- Optical diaphragm rupture indication with manometer

Motor:
- 230/400 V +/- 5% 50 Hz threephase, 460 V star +/- 5% 60 Hz threephase, IP 55, insul. cl. F

Further options and accessories:
- Connection pieces see chapter 4
- Product documentation see chapter 5

Type	Basic design		x
		Art.-no.	
R409.2-7,5KM		16021044	
R409.2-10KM		16021623	
R409.2-12KM		16021624	
R409.2-18KM		16018866	
R409.2-30KM		15003817	
R409.2-45KM		15003804	
R409.2-70KM		16017652	
R409.2-95KM		16021625	
R409.2-135KM		15003805	
R409.2-190KM		16019701	

Options/Accessories			R409.2-7,5KM up to R409.2-18KM	x	R409.2-30KM R409.2-45KM	x	R409.2-70KM R409.2-95KM	x	R409.2-135KM R409.2-190KM	x
Pump body and valves 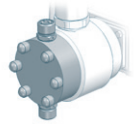	PP	single valves PP-FRP	–		–		●		●	
		double valves PP-FRP	●		●		–		–	
	PVC-U	single valves PVC-U	–		▲		▲		▲	
		chamber valves (double valves) PVC-U	▲		–		–		–	
	PVDF	single valves PVDF-FRP	–		–		▲		▲	
		double valves PVDF-FRP	▲		▲		▲		▲	
	1.4571	double valves 1.4571/1.4581	▲		▲		▲		▲	
Valve balls 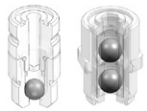	PTFE	single valves	–		❍		●		●	
		double valves	●		●		▲		▲	
	1.4401	single valves	–		❍		❍		❍	
		double valves	❍		❍		❍		❍	
Valve sealings	FPM	single valves	–		❍		●		●	
		double valves	●		●		❍		❍	
	EPDM	single valves	–		❍		❍		❍	
		double valves	❍		❍		❍		❍	
	FEP-covered	single valves	–		▲		▲		▲	
		double valves	▲		▲		▲		▲	
Diaphragm monitoring	optical diaphragm rupture indicator with manometer		●		●		●		●	
	Pressure switch IP 65		▲		▲		▲		▲	
	Pressure switch II2G EExd IIC T5 or T6 acc. to ATEX95		▲		▲		▲		▲	
Stroke length adjustment	with position indicator		▲		▲		▲		▲	

● = Basis design – = not available ▲ = with add. price ✆ = on request ❍ = without add. price Art.-No. = available in basic design/ accessories

© 2015 sera GmbH
Subject to technical modifications.

Order information

Basic design

R409.2-7,5KM up to R409.2-45KM

- Pump body PP
- Double valves PP-FRP
- Valve balls PTFE
- Valve seals FPM
- Multi-layer diaphragm PTFE
- Optical diaphragm rupture indication with manometer

R409.2-70KM up to R409.2-190KM

- Pump body PP
- Single valves PP-FRP
- Valve balls PTFE
- Valve seals FPM
- Multi-layer diaphragm PTFE
- Optical diaphragm rupture indication with manometer

Motor:

- 230/400 V +/- 5% 50 Hz threephase, 460 V star +/- 5% 60 Hz threephase, IP 55, insul. cl. F

Further options and accessories:

- Connection pieces see chapter 4
- Product documentation see chapter 5

Type	Basic design		×
		Art.-no.	
R409.2-7,5KM		16021044	
R409.2-10KM		16021623	
R409.2-12KM		16021624	
R409.2-18KM		16018866	
R409.2-30KM		15003817	
R409.2-45KM		15003804	
R409.2-70KM		16017652	
R409.2-95KM		16021625	
R409.2-135KM		15003805	
R409.2-190KM		16019701	

2

Options/Accessories		R409.2-7,5KM up to R409.2-18KM	×	R409.2-30KM R409.2-45KM	×	R409.2-70KM R409.2-95KM	×	R409.2-135KM R409.2-190KM	×
Stroke frequency monitoring 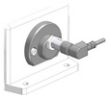	10-60 V DC, three-wire, PNP	▲		▲		▲		▲	
	Namur execution, II2G EExia IICT6 acc. to ATEX95	▲		▲		▲		▲	
Drive motor	Add. price for special drive	▲		▲		▲		▲	
	Special voltage	✆		✆		✆		✆	
	Enclosure IP 65	▲		▲		▲		▲	
	Protective roof for the fan of the drive	▲		▲		▲		▲	
	VIK-design	✆		✆		✆		✆	
	II2G EExe IIT4 (acc. to ATEX95)	▲		▲		▲		▲	
	Single phase AC 230V / 50 Hz with capacitor	▲		▲		▲		▲	
	electrical acc. to uL / CSA	✆		✆		✆		✆	
	Driver for converter operation incl. integrated posistor, 5-50/60Hz	▲		▲		▲		▲	
	Driver for converter operation II2G EExde IICT4, 5-50/60 Hz acc. ATEX 95, incl. integrated posistor	▲		▲		▲		▲	
	■ Please note: If one or several options ‚drive motor' are required to fix the add. price of the drive, the calculation will be as follows: ‚add. price special drive' plus the single options of the drive ■ Additional price and availability must be requested from **sera**								
Stroke length adjustment electrical 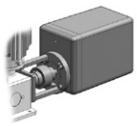	**Actuator N C1-BA** 230 V, +/- 10%, 50/60 Hz, 128s/10 U, 1,5 Nm incl. mounting plate for actuator	▲		▲		▲		▲	
	Electronic positioning controller PMR3 input signal 0/4-20 mA incl. feedback signal 0/4-20 mA (only in N C1-BA integrated)	▲		▲		▲		▲	
	Actuator D30D-10-Ex (II2G EExde IICT4) acc. to ATEX 95, 400 V, 50 Hz, 10 U/min, incl. mounting-kit for actuator and base plate	▲		▲		▲		▲	
	uL / CSA - design	✆		✆		✆		✆	

● = Basis design – = not available ▲ = with add. price ✆ = on request ❍ = without add. price Art.-No. = available in basic design/ accessories

© 2015 **sera GmbH**
Subject to technical modifications.

Order information

Basic design

R409.2-7,5KM up to R409.2-45KM
- Pump body PP
- Double valves PP-FRP
- Valve balls PTFE
- Valve seals FPM
- Multi-layer diaphragm PTFE
- Optical diaphragm rupture indication with manometer

R409.2-70KM up to R409.2-190KM
- Pump body PP
- Single valves PP-FRP
- Valve balls PTFE
- Valve seals FPM
- Multi-layer diaphragm PTFE
- Optical diaphragm rupture indication with manometer

Motor:
- 230/400 V +/- 5% 50 Hz threephase, 460 V star +/- 5% 60 Hz threephase, IP 55, insul. cl. F

Further options and accessories:
- Connection pieces see chapter 4
- Product documentation see chapter 5

Type	Basic design		×
		Art.-no.	
R409.2-7,5KM		16021044	
R409.2-10KM		16021623	
R409.2-12KM		16021624	
R409.2-18KM		16018866	
R409.2-30KM		15003817	
R409.2-45KM		15003804	
R409.2-70KM		16017652	
R409.2-95KM		16021625	
R409.2-135KM		15003805	
R409.2-190KM		16019701	

Options/Accessories			R409.2-7,5KM up to R409.2-18KM ×		R409.2-30KM R409.2-45KM ×		R409.2-70KM R409.2-95KM ×		R409.2-135KM R409.2-190KM ×	
Stroke frequency adjustment electrical 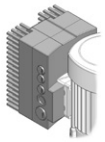	Frequency converter series INVEOR mounted-on, input 4-20mA									
	Single-phase 200-230 V, +/- 10%, 50/60 Hz	0,37 kW	▲		▲		▲		▲	
	Three-phase 400-480 V, +/- 10%, 50/60 Hz	0,55 kW	▲		▲		▲		▲	
	Service module MMI incl. connection cable		90039445		90039445		90039445		90039445	
Stroke frequency adjustment electrical 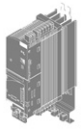	Frequency converter series 8200 Vector input 4-20mA, incl. Keypad (for integration into control cabinet)									
	Single-phase 230 V, 50/60 Hz	0,37 kW	90017522		90017522		90017522		90017522	
	Three-phase 320-550 V, +/- 0%, 50/60 Hz	0,55 kW	90017526		90017526		90017526		90017526	
Console 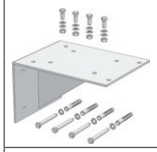	for wall mounting incl. fixing screws	1.4301	90023875		90023875		90023875		90023875	
		PP	90023848		90023848		90023848		90023848	

● = Basis design – = not available ▲ = with add. price ✆ = on request ❍ = without add. price Art.-No. = available in basic design/ accessories

© 2015 **sera GmbH**
Subject to technical modifications.

Fittings for suction side of dosing pumps		R409.2-7,5KM R409.2-10KM		R409.2-12KM R409.2-18KM		R409.2-30M R409.2-45KM		R409.2-70KM R409.2-95KM		R409.2-135KM R409.2-190KM	
		Type	p.	Type	p.	Type	p.	Type	p.	Type	p.
Pulsation damper without separating diaphragm	**PVC-U / PP / 1.4571**	✆		✆		✆		✆		✆	
Suction lance	**with level switch 1-stage**	SL-11.1	3.28	SL-11.1	3.28	SL-02	3.30	SL-02	3.30	SL-02	3.30
	without level switch	S-01	3.34	S-01	3.34	S-01	3.34	S-01	3.34	S-01	3.34
	with level switch 2-stage	SL-12.1	3.28	SL-12.1	3.28	SL-02	3.30	SL-02	3.30	SL-02	3.30
Suction aid / Siphon Vessel	**transparent PVC-U**	770.2	3.54	770.2	3.54	770.2	3.54	770.2	3.54	770.2	3.54
Calibration Pot	**PVC-U**	791.1	3.56	792.1	3.56	792.1	3.56	793.1	3.56	794.1	3.56
Foot valve	**PVC-U**	731	3.60	731	3.60	731	3.60	731	3.60	731	3.60
	1.4571	731	3.60	731	3.60	731	3.60	731	3.60	731	3.60
	PP-FRP / PVDF-FRP	781.1	3.64	781.1	3.64	781.1	3.64	781.1	3.64	781.1	3.64
Line strainer	**PVC-U / PP / PVDF**	✆		✆		✆		✆		✆	
	1.4408	✆		✆		✆		✆		✆	

Fittings for pressure side of dosing pumps		R409.2-7,5KM R409.2-10KM		R409.2-12KM R409.2-18KM		R409.2-30M R409.2-45KM		R409.2-70KM R409.2-95KM		R409.2-135KM R409.2-190KM	
		Type	p.	Type	p.	Type	p.	Type	p.	Type	p.
Diaphragm-type relief valve		620.10	3.4	620.10	3.4	620.10	3.4	620.10	3.4	622.10	3.4
Diaphragm-type pressure keeping valve		620.D	3.6	620.D	3.6	620.D	3.6	620.D	3.6	622.D	3.6
Multi-function valve	**4 bar opening pressure**	MFV 05004	3.8	MFV 05004	3.8	MFV 05004	3.8	–		–	
	6 bar opening pressure	MFV 05006	3.8	MFV 05006	3.8	MFV 05006	3.8	–		–	
	10 bar opening pressure	MFV 05010	3.8	MFV 05010	3.8	MFV 05010	3.8	–		–	
Pulsation damper without separating diaphragm	**PVC-U / PP / 1.4571**	✆		✆		✆		✆		✆	
Diaphragm-pulsation damper with PTFE/ PTFE-faced diaphragm	**PVC-U / PP / PVDF**	720.1	3.16	720.1	3.16	721.2	3.16	722.1	3.16	722.1	3.16
Diaphragm-pulsation damper with Elasto-mer-diaphragm	**1.4571**	810.1-0,16/...	3.22	810.1-0,16/...	3.22	810.1-0,16/...	3.22	810.1-0,32/...	3.22	810.1-0,32/...	3.22
Check valve	**PVC-U**	✆		✆		✆		✆		✆	
	PP-FRP / PVDF-FRP	✆		✆		✆		✆		✆	
	1.4571	✆		✆		✆		✆		✆	
Dosing valve	**PVC-U**	691.1	3.40	691.1	3.40	691.1	3.40	691.1	3.40	691.1	3.40
	PP-FRP / PVDF-FRP	691.1	3.40	691.1	3.40	691.1	3.40	691.1	3.40	691.1	3.40
	1.4571	691.1	3.40	691.1	3.40	691.1	3.40	691.1	3.40	691.1	3.40
	PVC-U / PP / PVDF	681.1	3.44	681.1	3.44	681.1	3.44	681.1	3.44	681.1	3.44
Injection fitting	**PVC-U / PP / PVDF**	8061.1	3.46	8061.1	3.46	8061.1	3.46	8061.1	3.46	8061.1	3.46

The above allocation considers the fittings which have to be used at least regarding their nominal width in order to ensure the safe and trouble-free operation of the respective pumps when feeding liquids which are resembling to water.
Absolutely note the max. admissible operating pressure of the fittings.
The use of fittings of a bigger nominal width is unproblematically possible in most cases.
When choosing the fittings note the installation instructions for dosing pumps or confer with **sera**

© 2015 **sera GmbH**
Subject to technical modifications.

R410.2-...KM in survey

- Multi-layer diaphragm technology
- High dosing accuracy
- Safe to run dry
- High quality materials
- Leakage free
- Low maintenance
- Easy to use
- Integrable into automatic processes
- Manual stroke length adjustment
- Robust metallic housing

Infobox

Order information Page 2.108
Options/accessories Page 2.108
Fittings-allocation Page 2.111
Connecting pieces Chapter 4
Resistance chart Chapter 5
Installation examples Chapter 5

2

Technical data

Type	Nominal capacity 50 Hz l/h	Nominal capacity 50 Hz gal/h	Nominal capacity 60 Hz l/h	Nominal capacity 60 Hz gal/h	Nominal stroke frequency 50 Hz 1/min	Nominal stroke frequency 60 Hz 1/min	Capacity per stroke ml/stroke	Admissible Counterpressure bar	Admissible Counterpressure psi
R410.2-30KM	0 - 30	0 - 7,93	0 - 36	0 - 9,51	76	92	6,5	80	1.160
R410.2-38KM	0 - 38	0 - 10,04	0 - 45	0 - 11,89	97	116	6,5	80	1.160
R410.2-60KM	0 - 60	0 - 15,85	0 - 72	0 - 19,02	76	92	13	70	1.015
R410.2-76KM	0 - 76	0 - 20,08	0 - 90	0 - 23,78	97	116	13	70	1.015
R410.2-120KM	0 - 120	0 - 31,70	0 - 144	0 - 38,04	76	92	26,3	40	580
R410.2-150KM	0 - 150	0 - 39,63	0 - 180	0 - 47,55	97	116	25,8	40	580
R410.2-250KM	0 - 250	0 - 66,04	0 - 300	0 - 79,25	76	92	54,8	20	290
R410.2-310KM	0 - 310	0 - 81,89	0 - 372	0 - 98,27	97	116	53,3	20	290
R410.2-400KM	0 - 400	0 - 105,67	0 - 480	0 - 126,80	76	92	87,7	14	203
R410.2-510KM	0 - 510	0 - 134,73	–	–	97	–	87,6	14	203
R410.2-700KM	0 - 700	0 - 184,92	–	–	97	–	120,3	11	159,5
R410.2-850KM	0 - 850	0 - 224,55	0 - 1.020	0 - 269,46	76	92	186,4	8	116

- Note: The admissible counterpressure is 10 bar (145 psi) or lower when plastic pump bodies are used.

Type	Admissible pressure at pump inlet bar	Admissible pressure at pump inlet psi	Max. Suction height mWC	Inlet/ Outlet nominal width DN	Max. stroke length mm	Max. stroke length in	Motor output kW
R410.2-30KM	-0,2 / 0	-2,9 / 0	2	8	13	0,51	0,75
R410.2-38KM	-0,2 / 0	-2,9 / 0	2	8	13	0,51	0,75
R410.2-60KM	-0,2 / 0	-2,9 / 0	2	8	13	0,51	0,75
R410.2-76KM	-0,2 / 0	-2,9 / 0	2	8	13	0,51	0,75
R410.2-120KM	-0,3 / 0	-4,3 / 0	3	15	13	0,51	1,5
R410.2-150KM	-0,3 / 0	-4,3 / 0	3	15	13	0,51	1,5
R410.2-250KM	-0,3 / 0	-4,3 / 0	3	15	13	0,51	1,5
R410.2-310KM	-0,3 / 0	-4,3 / 0	3	15	13	0,51	1,5
R410.2-400KM	-0,3 / 0	-4,3 / 0	3	15	13	0,51	1,5
R410.2-510KM	-0,3 / 0	-4,3 / 0	3	15	13	0,51	1,5
R410.2-700KM	-0,3 / 0	-4,3 / 0	3	20	13	0,51	1,5
R410.2-850KM	-0,3 / 0	-4,3 / 0	3	20	20	0,79	1,5

© 2015 sera GmbH
Subject to technical modifications.

Dimensional drawing

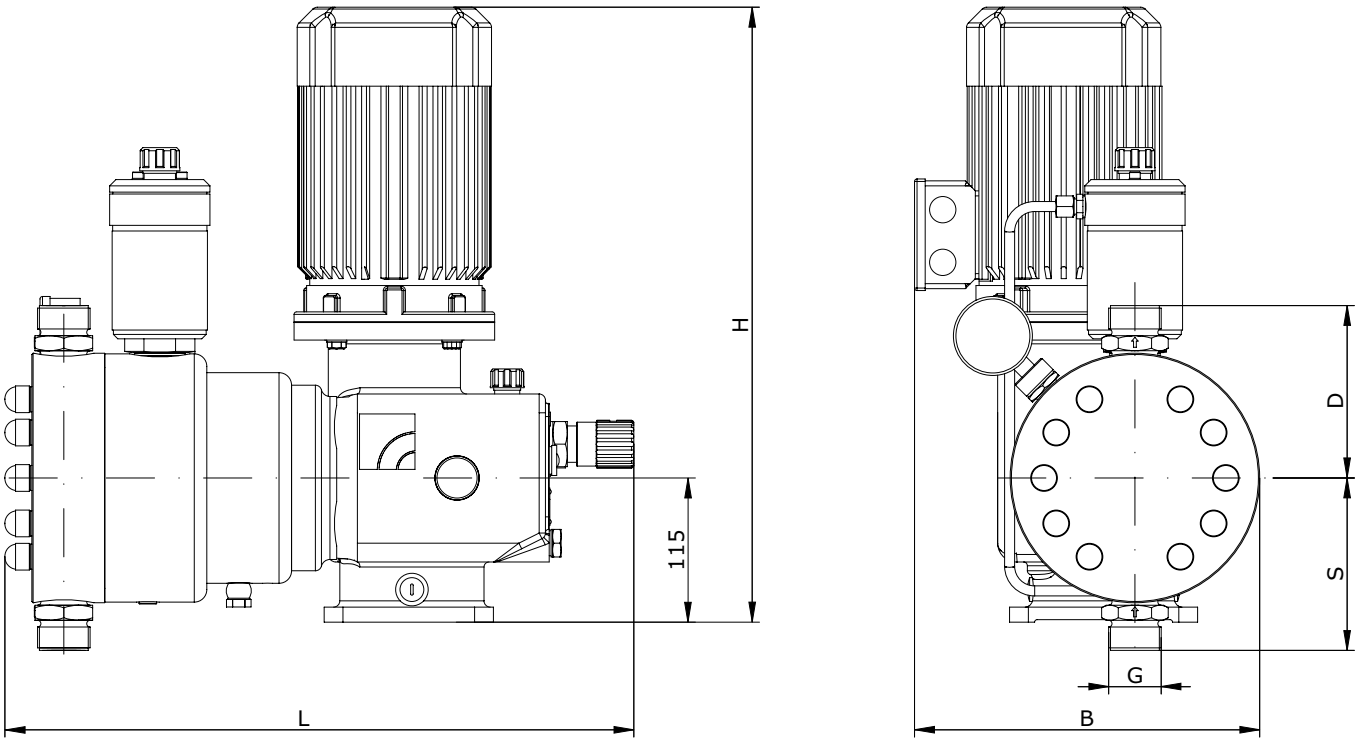

Dimensional chart

Indications in mm / inch

Type	G	S		D	
		mm	in	mm	in
R410.2-30KM	G 3/4	95	3,74	95	3,74
R410.2-38KM	G 3/4	95	3,74	95	3,74
R410.2-60KM	G 3/4	95	3,74	95	3,74
R410.2-76KM	G 3/4	95	3,74	95	3,74
R410.2-120KM	G 1 1/4	138	5,43	138	5,43
R410.2-150KM	G 1 1/4	138	5,43	138	5,43
R410.2-250KM	G 1 1/4	138	5,43	138	5,43
R410.2-310KM	G 1 1/4	138	5,43	138	5,43
R410.2-400KM	G 1 1/4	138	5,43	138	5,43
R410.2-510KM	G 1 1/4	138	5,43	138	5,43
R410.2-700KM	G 1 1/4	162	6,38	162	6,38
R410.2-850KM	G 1 1/4	162	6,38	162	6,38

Type	L		B		H		Weight
	mm	in	mm	in	mm	in	kg
R410.2-30KM	495	19,49	280	11,02	490	19,29	35
R410.2-38KM	495	19,49	280	11,02	490	19,29	35
R410.2-60KM	495	19,49	280	11,02	490	19,29	35
R410.2-76KM	495	19,49	280	11,02	490	19,29	35
R410.2-120KM	535	21,06	305	12,01	530	20,87	46
R410.2-150KM	535	21,06	305	12,01	530	20,87	46
R410.2-250KM	535	21,06	305	12,01	530	20,87	46
R410.2-310KM	535	21,06	305	12,01	530	20,87	46
R410.2-400KM	535	21,06	305	12,01	530	20,87	46
R410.2-510KM	535	21,06	305	12,01	530	20,87	46
R410.2-700KM	535	21,06	330	12,99	530	20,87	62
R410.2-850KM	580	22,83	330	12,99	530	20,87	62

■ Indication of weight for basic design acc. to order information

© 2015 **sera GmbH**
Subject to technical modifications.

Order information

Basic design

R410.2-30KM up to R410.2-38KM
- Pump body PP
- Double valves PP-FRP
- Valve balls PTFE
- Valve seals FPM
- Multi-layer diaphragm PTFE
- Optical diaphragm rupture indication with manometer

R410.2-60KM up to R410.2-76KM
- Pump body PP
- Single valves PP-FRP
- Valve balls PTFE
- Valve seals FPM
- Multi-layer diaphragm PTFE
- Optical diaphragm rupture indication with manometer

R410.2-120KM up to R410.2-850KM
- Pump body PP
- Single valves PP-FRP
- Valve balls PTFE
- Valve seals FPM
- Multi-layer diaphragm PTFE
- Optical diaphragm rupture indication with manometer

Motor:
- 200-240/380-420 V +/- 5%, 50/60 Hz threephase, IP 55, ISO F

Further options and accessories:
- Connection pieces see chapter 4
- Product documentation see chapter 5

Type	Basic design		×
		Art.-no.	
R410.2-30KM		16021626	
R410.2-38KM		16021627	
R410.2-60KM		16021628	
R410.2-76KM		16021629	
R410.2-120KM		16021630	
R410.2-150KM		16021631	
R410.2-250KM		15004466	
R410.2-310KM		16019600	
R410.2-400KM		16021632	
R410.2-510KM		16019547	
R410.2-700KM		16021633	
R410.2-850KM		16019643	

Options/Accessories			R410.2-30KM up to R410.2-38KM	×	R410.2-60KM R410.2-76KM	×	R410.2-120KM up to R410.2-510KM	×	R410.2-700KM R410.2-850KM	×
Pump body and valves 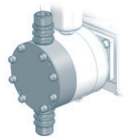	PP	single valves PP-FRP	–		●		●		●	
		double valves PP-FRP	●		–		–		–	
	PVC-U	single valves PVC-U	▲		▲		▲		▲	
	PVDF	single valves PVDF-FRP	–		▲		▲		▲	
		double valves PVDF-FRP	▲		–		–		–	
	1.4571	single valves 1.4571/1.4581	–		–		▲		▲	
		double valves 1.4571/1.4581	▲		▲		–		–	
Valve balls 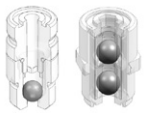	PTFE	single valves	❍		●		●		●	
		double valves	●		▲		–		–	
	1.4401	single valves	❍		❍		❍		❍	
		double valves	❍		❍		–		–	
Valve sealings	FPM	single valves	❍		●		●		●	
		double valves	●		❍		–		–	
	EPDM	single valves	❍		❍		❍		❍	
		double valves	❍		❍		–		–	
	FEP-covered	single valves	▲		▲		▲		▲	
		double valves	▲		▲		–		–	
Diaphragm monitoring	optical diaphragm rupture indicator with manometer		●		●		●		●	
	Pressure switch IP 65		▲		▲		▲		▲	
	Pressure switch II2G EExd IIC T5 or T6 acc. to ATEX95		▲		▲		▲		▲	
Stroke length adjustment	with position indicator		▲		▲		▲		▲	

● = Basis design – = not available ▲ = with add. price ✆ = on request ❍ = without add. price Art.-No. = available in basic design/ accessories

© 2015 sera GmbH
Subject to technical modifications.

Order information

Basic design

R410.2-30KM up to R410.2-38KM
- Pump body PP
- Double valves PP-FRP
- Valve balls PTFE
- Valve seals FPM
- Multi-layer diaphragm PTFE
- Optical diaphragm rupture indication with manometer

R410.2-60KM up to R410.2-76KM
- Pump body PP
- Single valves PP-FRP
- Valve balls PTFE
- Valve seals FPM
- Multi-layer diaphragm PTFE
- Optical diaphragm rupture indication with manometer

R410.2-120KM up to R410.2-850KM
- Pump body PP
- Single valves PP-FRP
- Valve balls PTFE
- Valve seals FPM
- Multi-layer diaphragm PTFE
- Optical diaphragm rupture indication with manometer

Motor:
- 200-240/380-420 V +/- 5%, 50/60 Hz threephase, IP 55, ISO F

Further options and accessories:
- Connection pieces see chapter 4
- Product documentation see chapter 5

Type	Basic design		×
		Art.-no.	
R410.2-30KM		16021626	
R410.2-38KM		16021627	
R410.2-60KM		16021628	
R410.2-76KM		16021629	
R410.2-120KM		16021630	
R410.2-150KM		16021631	
R410.2-250KM		15004466	
R410.2-310KM		16019600	
R410.2-400KM		16021632	
R410.2-510KM		16019547	
R410.2-700KM		16021633	
R410.2-850KM		16019643	

Options/Accessories		R410.2-30KM up to R410.2-38KM	×	R410.2-60KM R410.2-76KM	×	R410.2-120KM up to R410.2-510KM	×	R410.2-700KM R410.2-850KM	×
Stroke frequency monitoring 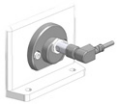	10-60 V DC, three-wire, PNP	▲		▲		▲		▲	
	Namur execution, II2G EExia IICT6 acc. to ATEX95	▲		▲		▲		▲	
Drive motor	Add. price for special drive	▲		▲		▲		▲	
	Special voltage	✆		✆		✆		✆	
	Enclosure IP 65	▲		▲		▲		▲	
	Protective roof for the fan of the drive	▲		▲		▲		▲	
	VIK-design	✆		✆		✆		✆	
	II2G EExe IIT4 (acc. to ATEX95)	▲		▲		▲		▲	
	Single phase AC 230V / 50 Hz with capacitor	▲		▲		▲		▲	
	electrical acc. to uL / CSA	✆		✆		✆		✆	
	Driver for converter operation incl. integrated posistor, 5-50/60Hz	▲		▲		▲		▲	
	Driver for converter operation II2G EExde IICT4, 5-50/60 Hz acc. ATEX 95, incl. integrated posistor	▲		▲		▲		▲	
	■ Please note: If one or several options ‚drive motor' are required to fix the add. price of the drive, the calculation will be as follows: ‚add. price special drive' plus the single options of the drive ■ Additional price and availability must be requested from **sera**								
Stroke length adjustment electrical 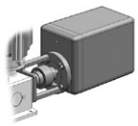	Actuator N1S 230 V, 50/60 Hz, 128s/10 U, 15 Nm Potentiometer 1 kOhm incl. mounting kit for actuator	▲		▲		▲		▲	
	Electronic positioning controller PMR3 input signal 0/4-20 mA incl. feedback signal 0/4-20 mA (only in N 1S integrated)	▲		▲		▲		▲	
	Actuator D30D-10-Ex (II2G EExde IICT4) acc. to ATEX 95, 400 V, 50 Hz, 10 U/min, incl. mounting-kit for actuator and base plate	▲		▲		▲		▲	

● = Basis design – = not available ▲ = with add. price ✆ = on request ❍ = without add. price Art.-No. = available in basic design/ accessories

© 2015 **sera GmbH**
Subject to technical modifications.

Order information

Basic design

R410.2-30KM up to R410.2-38KM
- Pump body PP
- Double valves PP-FRP
- Valve balls PTFE
- Valve seals FPM
- Multi-layer diaphragm PTFE
- Optical diaphragm rupture indication with manometer

R410.2-60KM up to R410.2-76KM
- Pump body PP
- Single valves PP-FRP
- Valve balls PTFE
- Valve seals FPM
- Multi-layer diaphragm PTFE
- Optical diaphragm rupture indication with manometer

R410.2-120KM up to R410.2-850KM
- Pump body PP
- Single valves PP-FRP
- Valve balls PTFE
- Valve seals FPM
- Multi-layer diaphragm PTFE
- Optical diaphragm rupture indication with manometer

Motor:
- 200-240/380-420 V +/- 5%, 50/60 Hz threephase, IP 55, ISO F

Further options and accessories:
- Connection pieces see chapter 4
- Product documentation see chapter 5

Type	Basic design		×
		Art.-no.	
R410.2-30KM		16021626	
R410.2-38KM		16021627	
R410.2-60KM		16021628	
R410.2-76KM		16021629	
R410.2-120KM		16021630	
R410.2-150KM		16021631	
R410.2-250KM		15004466	
R410.2-310KM		16019600	
R410.2-400KM		16021632	
R410.2-510KM		16019547	
R410.2-700KM		16021633	
R410.2-850KM		16019643	

Options/Accessories			R410.2-30KM up to R410.2-38KM ×	R410.2-60KM R410.2-76KM ×	R410.2-120KM up to R410.2-510KM ×	R410.2-700KM R410.2-850KM ×
Stroke frequency adjustment electrical 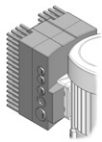	Frequency converter series 8200 Vector input 4-20mA, incl. Keypad (for integration into control cabinet)					
	Three-phase 400-480 V, +/- 0%, 50/60 Hz	0,75 kW	▲	▲	–	–
		1,5 kW	–	–	▲	▲
	Service module MMI incl. connection cable		90039445	90039445	90039445	90039445
Stroke frequency adjustment electrical	Frequency converter series 8200 Vector input 4-20mA, incl. Keypad (for integration into control cabinet)					
	Single-phase 230 V, 50/60 Hz	0,75 kW	90017524	–	–	–
		1,5 kW	–	90017524	90016865	90016865
	Three-phase 320-550 V, +/- 0%, 50/60 Hz	0,75 kW	90017527	–	–	–
		1,5 kW	–	90017527	90017528	90017528
Console 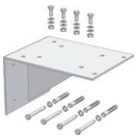	for wall mounting incl. fixing screws	1.4301	90023876	90023876	90023876	90023876
		PP	90023849	90023849	90023849	90023849

● = Basis design – = not available ▲ = with add. price ✆ = on request ❍ = without add. price Art.-No. = available in basic design/ accessories

© 2015 sera GmbH
Subject to technical modifications.

Fittings for suction side of dosing pumps		R410.2-30KM up to R410.2-60KM		R410.2-76KM up to R410.2-150KM		R410.2-250KM up to R410.2-510KM		R410.2-700KM		R410.2-850KM	
		Type	p.	Type	p.	Type	p.	Type	p.	Type	p.
Pulsation damper without separating diaphragm	**PVC-U / PP / 1.4571**	✆		✆		✆		✆		✆	
Suction lance	**with level switch 1-stage**	SL-02	3.30	–		SLP-151.1	3.32	SLP-151.1	3.32	–	
	without level switch	S-01	3.34	S-01	3.34	S-01	3.34	S-01	3.34	S-01	3.34
Suction aid / Siphon Vessel	**transparent PVC-U**	770.2	3.54	770.2	3.54	770.2	3.54	771.2	3.54	771.2	3.54
Calibration Pot	**PVC-U**	792.1	3.56	794.1	3.56	795.1	3.56	795.1	3.56	796.1	3.56
Foot valve	**PVC-U**	731	3.60	732.3	3.58	732.3	3.58	733.3	3.58	734.3	3.58
	PP / PVDF	–		732	3.60	732	3.60	733	3.60	733	3.60
	1.4571	731	3.60	732	3.60	732	3.60	733	3.60	733	3.60
	PP-FRP / PVDF-FRP	781.1	3.64	783.1	3.64	783.1	3.64	783.1	3.64	–	
Line strainer	**PVC-U / PP / PVDF**	✆		✆		✆		✆		✆	
	1.4408	✆		✆		✆		✆		✆	

Fittings for pressure side of dosing pumps		R410.2-30KM up to R410.2-60KM		R410.2-76KM up to R410.2-150KM		R410.2-250KM up to R410.2-510KM		R410.2-700KM		R410.2-850KM	
		Type	p.	Type	p.	Type	p.	Type	p.	Type	p.
Diaphragm-type relief valve		620.10	3.4	622.10	3.4	622.10	3.4	623.10	3.4	623.10	3.4
Diaphragm-type pressure keeping valve		620.D	3.6	622.D	3.6	622.D	3.6	623.D	3.6	623.D	3.6
Pulsation damper without separating diaphragm	**PVC-U / PP / 1.4571**	✆		✆		✆		✆		✆	
Diaphragm-pulsation damper with Elasto-mer-diaphragm	**1.4571**	713.1	3.14	713.1	3.14	713.1	3.14	713.1	3.14	713.1	3.14
		810.1-0,32/...	3.22	810.1-0,75/...	3.22	810.1-0,75/...	3.22	810.1-0,75/...	3.22	810.1-2,0/...	3.22
	PVC-U / PP / PVDF	713.1	3.12	713.1	3.12	713.1	3.12	713.1	3.12	713.1	3.12
Diaphragm-pulsation damper with PTFE/PT-FE-faced diaphragm	**PVC-U / PP / PVDF**	721.2	3.16	723.1	3.16	723.1	3.16	723.1	3.16	✆	
	1.4571	721.1	3.20	723.1	3.20	723.1	3.20	723.1	3.20	✆	
Check valve	**1.4571**	✆		✆		✆		✆		✆	
	PVC-U	✆		–		–		–		–	
	PP-FRP / PVDF-FRP	✆		–		–		–		–	
Dosing valve	**PP-FRP / PVDF-FRP**	691.1	3.40	693.1	3.40	693.1	3.40	693.1	3.40	693.1	3.40
	1.4571	691.1	3.40	692.1	3.40	692.1	3.40	693.1	3.40	693.1	3.40
Injection fitting	**PVC-U / PP / PVDF**	8061.1	3.46	8062.1	3.46	8062.1	3.46	8063.1	3.46	8063.1	3.46

The above allocation considers the fittings which have to be used at least regarding their nominal width in order to ensure the safe and trouble-free operation of the respective pumps when feeding liquids which are resembling to water.
Absolutely note the max. admissible operating pressure of the fittings.
The use of fittings of a bigger nominal width is unproblematically possible in most cases.
When choosing the fittings note the installation instructions for dosing pumps or confer with **sera**

© 2015 **sera GmbH**
Subject to technical modifications.

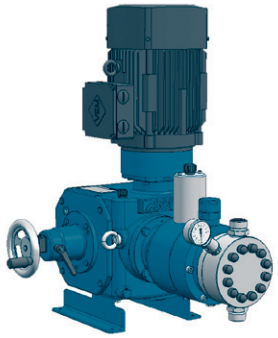

R510.1-...KM in survey

- Multi-layer diaphragm technology
- High dosing accuracy
- Safe to run dry
- Integrated diaphragm monitoring
- Internal overload protection
- high quality materials
- Leakage free
- Low maintenance
- Manual stroke length adjustment
- Robust metallic housing

Infobox

Order information	Page 2.114
Options/accessories	Page 2.114
Fittings-allocation	Page 2.117
Connecting pieces	Chapter 4
Resistance chart	Chapter 5
Installation examples	Chapter 5

2

Technische Daten

Type	Nominal capacity*				Nominal stroke frequency		Capacity per stroke	Admissible Counterpressure	
	50 Hz		60 Hz		50 Hz	60 Hz			
	l/h	gal/h	l/h	gal/h	1/min	1/min	ml/stroke	bar	psi
R510.1- 4,9 KM	4,9	1,30	5,9	1,56	130	156	0,6	300	4350
R510.1- 9,0 KM	9,0	2,38	10,8	2,85	130	156	1,2	300	4350
R510.1- 13,5 KM	13,5	3,57	16,2	4,28	130	156	1,7	290	4205
R510.1- 19 KM	19	5,02	22,8	6,02	130	156	2,4	210	3045
R510.1- 37 KM	37	9,78	44,4	11,73	130	156	4,7	180	2610
R510.1- 54 KM	54	14,27	64,8	17,12	130	156	6,9	160	2320
R510.1- 65 KM	65	17,17	78	20,61	130	156	8,6	180	2610
R510.1- 150 KM	150	39,63	180	47,55	130	156	20	80	1160
R510.1- 300 KM	300	79,25	360	95,10	130	156	40	45	652,5
R510.1- 700 KM	700	184,94	840	221,93	130	156	80	22	362,5
R510.1- 850 KM	850	224,57	1020	269,49	130	156	126,6	16	232
R510.1- 1100 KM	1100	290,62	1320	348,75	130	156	173,3	13	188,5

- * For designs according to API an output reserve to 10 % has to be considered.

Type	Admissible pressure at pump inlet		Max. Suction height	Inlet/ Outlet nominal width	Max. stroke length		Motor output
	bar	psi	mWC	DN	mm	in	kW
R510.1- 4,9 KM	-0,3/1	-4,3/14,5	3	5	14	0,55	1,1
R510.1- 9,0 KM	-0,3/1	-4,3/14,5	3	5	14	0,55	1,1
R510.1- 13,5 KM	-0,3/1	-4,3/14,5	3	5	14	0,55	1,1
R510.1- 19 KM	-0,3/1	-4,3/14,5	3	5	14	0,55	1,1
R510.1- 37 KM	-0,3/1	-4,3/14,5	3	8	20	0,80	1,5
R510.1- 54 KM	-0,3/1	-4,3/14,5	3	8	14	0,55	1,5
R510.1- 65 KM	-0,3/1	-4,3/14,5	3	10	20	0,80	1,5
R510.1- 150 KM	-0,3/1	-4,3/14,5	3	20	20	0,80	1,5
R510.1- 300 KM	-0,3/1	-4,3/14,5	3	20	20	0,80	1,5
R510.1- 700 KM	-0,3/1	-4,3/14,5	3	20	20	0,80	1,5
R510.1- 850 KM	-0,3/1	-4,3/14,5	3	32	20	0,80	1,5
R510.1- 1100 KM	-0,3/1	-4,3/14,5	3	32	20	0,80	1,5

© 2015 sera GmbH
Subject to technical modifications.

Dimensional drawing

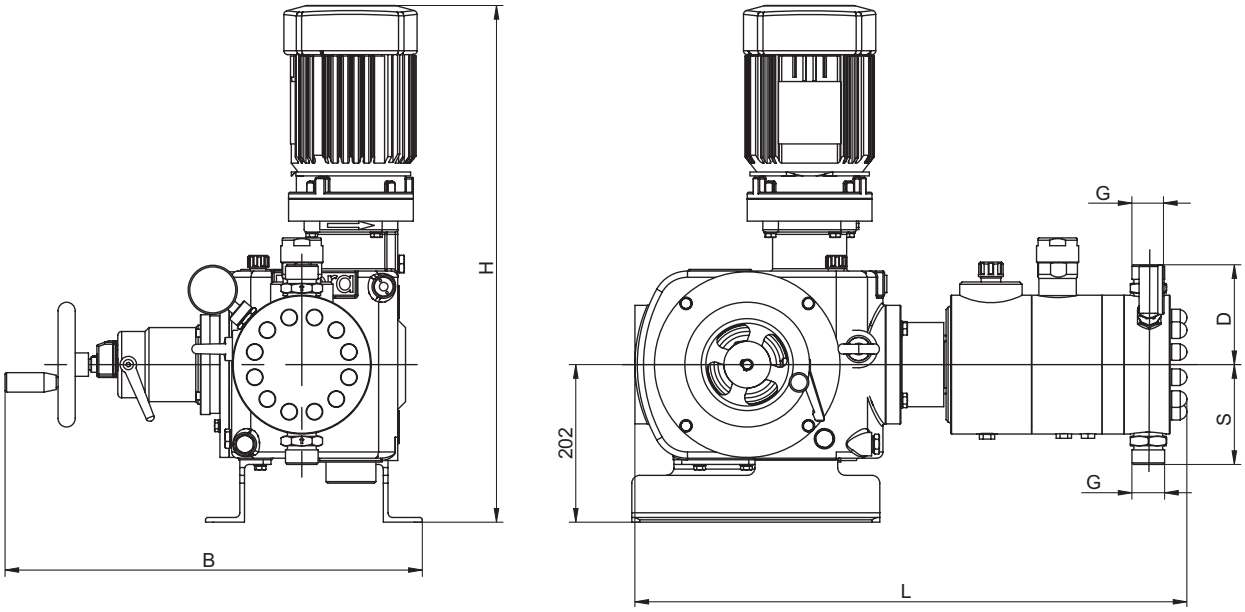

Dimensional chart
Indications in mm / inch

Type	Internal thread					External thread				
	G	S		D		G	S		D	
		mm	in	mm	in		mm	in	mm	in
R510.1- 4,9 KM	1/2“ NPT	95	3,74	95	3,74	G 1/2	114	4,49	114	4,49
R510.1- 9,0 KM	1/2“ NPT	95	3,74	95	3,74	G 1/2	114	4,49	114	4,49
R510.1- 13,5 KM	1/2“ NPT	95	3,74	95	3,74	G 1/2	114	4,49	114	4,49
R510.1- 19 KM	1/2“ NPT	95	3,74	95	3,74	G 1/2	114	4,49	114	4,49
R510.1- 37 KM	-	-	-	-	-	G 3/4	97	3,82	104	4,09
R510.1- 54 KM	-	-	-	-	-	G 3/4	97	3,82	104	4,09
R510.1- 65 KM	-	-	-	-	-	G 3/4	97	3,82	104	4,09
R510.1- 150 KM	-	-	-	-	-	G 1 1/4	128	5,04	128	5,04
R510.1- 300 KM	-	-	-	-	-	G 1 1/4	138	5,43	138	5,43
R510.1- 700 KM	-	-	-	-	-	G 1 1/4	138	5,43	138	5,43
R510.1- 850 KM *	-	-	-	-	-	-	-	-	-	-
R510.1- 1100 KM *	-	-	-	-	-	-	-	-	-	-

* available only with flange connection.

Type	L		B		H		Weight **
	mm	in	mm	in	mm	in	approx. kg
R510.1- 4,9 KM	557	21,93	527	20,75	664	26,14	100
R510.1- 9,0 KM	557	21,93	527	20,75	664	26,14	100
R510.1- 13,5 KM	557	21,93	527	20,75	664	26,14	100
R510.1- 19 KM	557	21,93	527	20,75	664	26,14	100
R510.1- 37 KM	646	25,43	527	20,75	712	28,03	100
R510.1- 54 KM	646	25,43	527	20,75	712	28,03	120
R510.1- 65 KM	646	25,43	527	20,75	712	28,03	120
R510.1- 150 KM	696	27,40	527	20,75	712	28,03	130
R510.1- 300 KM	705	27,76	527	20,75	712	28,03	130
R510.1- 700 KM	705	27,76	527	20,75	712	28,03	145
R510.1- 850 KM	760	29,92	527	20,75	712	28,03	160
R510.1- 1100 KM	760	29,92	527	20,75	712	28,03	160

** Indication of weight for basic design acc. to order information

Flange connections with design acc. to API (without illustration)

Type	DIN		ANSI	
	Flange	Dimensions	Flange	Dimensions
R510.1- 4,9 KM ... - 65 KM	DN10	acc. to DIN EN 1092-1	1/2“	acc. to ANSI
R510.1- 150 KM ... - 700 KM	DN20	acc. to DIN EN 1092-1	3/4“	acc. to ANSI
R510.1- 850 KM ... -1100 KM	DN32	acc. to DIN EN 1092-1	1 1/4“	acc. to ANSI

© 2015 **sera GmbH**
Subject to technical modifications.

Order information

Basic design

R510.1-4,9KM up to R510.1-65KM
- Pump body 1.4571
- Double valve 1.4571/1.4581
- Valve balls 1.4401
- Valve sealings FPM
- Multi-layer diaphragm PTFE
- Optical diaphragm rupture indication with manometer

R510.1-150KM up to R510.1-1100KM
- Pump body 1.4571
- Plate valve 1.4571
- Valve sealings FPM
- Multi-layer diaphragm PTFE
- Optical diaphragm rupture indication with manometer

Motor:
- 230/400V 50Hz, 460V 60Hz (Star) 3-phase, IP55, ISO F

Further options and accessories:
- Connection pieces see chapter 4
- Product documentation see chapter 5

Typ		×
R510.1- 4,9KM		
R510.1- 9,0KM		
R510.1- 13,5KM		
R510.1- 19KM		
R510.1- 37KM		
R510.1- 54KM		
R510.1- 65KM		
R510.1- 150KM		
R510.1- 300KM		
R510.1- 700KM		
R510.1- 850KM		
R510.1- 1100KM		

Options/Accessories			R510.1-4,9KM up to R510.1-19KM	×	R510.1-37KM up to R510.1-65KM	×	R510.1-150KM up to R510.1-700KM	×	R510.1-850KM up to R510.1-1100KM	×
Pump body and valves	Pump body 1.4571	Double valve 1.4571	●		–		–		–	
		Single valve 1.4571	–		●		–		–	
		Plate valve 1.4571	–		–		●		●	
Pump body and valves acc. API675	Pump body 1.4571	Double valve 1.4571 (DIN-flange)	▲		–		–		–	
		Double valve 1.4571 (ANSI-flange)	▲		–		–		–	
		Single valve 1.4571 (DIN-flange)	–		▲		–		–	
		Single valve 1.4571 (ANSI-flange)	–		▲		–		–	
		Plate valve 1.4571 (DIN-flange)	–		–		▲		●	
		Plate valve 1.4571 (ANSI-flange)	–		–		▲		▲	
Valve balls 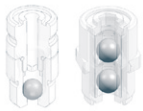	1.4401		●		●		–		–	
Valve sealings 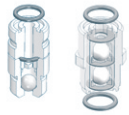	FFKM	Double valve	▲		–		–		–	
	FEP-covered	Single valve	–		▲		–		–	
		Plate valve	–		–		▲		▲	
Diaphragm monitoring	optical diaphragm rupture indicator with manometer		●		●		●		●	
	Pressure switch IP 65		▲		▲		▲		▲	
	Pressure switch II2G EExd IIC T5 or T6 acc. to ATEX95		▲		▲		▲		▲	

● = Basis design – = not available ▲ = with add. price ✆ = on request ❍ = without add. price Art.-No. = available in basic design/ accessories

© 2015 sera GmbH
Subject to technical modifications.

Order information

Basic design

R510.1-4,9KM up to R510.1-65KM

- Pump body 1.4571
- Double valve 1.4571/1.4581
- Valve balls 1.4401
- Valve sealings FPM
- Multi-layer diaphragm PTFE
- Optical diaphragm rupture indication with manometer

R510.1-150KM up to R510.1-1100KM

- Pump body 1.4571
- Plate valve 1.4571
- Valve sealings FPM
- Multi-layer diaphragm PTFE
- Optical diaphragm rupture indication with manometer

Motor:

- 230/400V 50Hz, 460V 60Hz (Star) 3-phase, IP55, ISO F

Further options and accessories:

- Connection pieces see chapter 4
- Product documentation see chapter 5

Typ	Price (EUR)	×
R510.1- 4,9KM		
R510.1- 9,0KM		
R510.1- 13,5KM		
R510.1- 19KM		
R510.1- 37KM		
R510.1- 54KM		
R510.1- 65KM		
R510.1- 150KM		
R510.1- 300KM		
R510.1- 700KM		
R510.1- 850KM		
R510.1- 1100KM		

Options/Accessories		R510.1-4,9KM up to R510.1-19KM	×	R510.1-37KM up to R510.1-65KM	×	R510.1-150KM up to R510.1-700KM	×	R510.1-850KM up to R510.1-1100KM	×
Stroke frequency monitoring 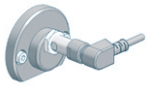	10-60 V DC, three-wire, PNP	✆		✆		✆		✆	
	Namur execution, II2G EExia IICT6 acc. to ATEX95	✆		✆		✆		✆	
Drive motor 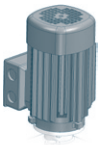	Special voltage	✆		✆		✆		✆	
	Enclosure IP 65	✆		✆		✆		✆	
	Protective roof for the fan of the drive	✆		✆		✆		✆	
	integrated PTC-thermistor (3 pcs.) insul. cl. F	✆		✆		✆		✆	
	VIK-design	✆		✆		✆		✆	
	II2G EExe IIT4 (acc. to ATEX95)	✆		✆		✆		✆	
	II2G EExde IICT4 (acc. to ATEX95)	✆		✆		✆		✆	
	electrical acc. to uL/CSA	✆		✆		✆		✆	
	Drive for converter operation incl. integrated PTC-thermistor, 5-50/60Hz	▲		▲		▲		▲	
	Drive for converter operation II2G EExde IICT4, 5-60 Hz gem. ATEX 95, incl. integrated PTC-thermistor	✆		✆		✆		✆	

● = Basis design — = not available ▲ = with add. price ✆ = on request ❍ = without add. price Art.-No. = available in basic design/ accessories

2

© 2015 **sera GmbH**
Subject to technical modifications.

Order information

Basic design

R510.1-4,9KM up to R510.1-65KM
- Pump body 1.4571
- Double valve 1.4571/1.4581
- Valve balls 1.4401
- Valve sealings FPM
- Multi-layer diaphragm PTFE
- Optical diaphragm rupture indication with manometer

R510.1-150KM up to R510.1-1100KM
- Pump body 1.4571
- Plate valve 1.4571
- Valve sealings FPM
- Multi-layer diaphragm PTFE
- Optical diaphragm rupture indication with manometer

Motor:
- 230/400V 50Hz, 460V 60Hz (Star) 3-phase, IP55, ISO F

Further options and accessories:
- Connection pieces see chapter 4
- Product documentation see chapter 5

Typ		×
R510.1- 4,9KM	✆	
R510.1- 9,0KM	✆	
R510.1- 13,5KM	✆	
R510.1- 19KM	✆	
R510.1- 37KM	✆	
R510.1- 54KM	✆	
R510.1- 65KM	✆	
R510.1- 150KM	✆	
R510.1- 300KM	✆	
R510.1- 700KM	✆	
R510.1- 850KM	✆	
R510.1- 1100KM	✆	

Options/Accessories		R510.1-4,9KM up to R510.1-19KM	×	R510.1-37KM up to R510.1-65KM	×	R510.1-150KM up to R510.1-700KM	×	R510.1-850KM up to R510.1-1100KM	×
Stroke length adjustment electrical 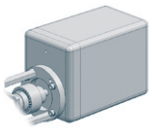	Actuator DR59-D-40-Ex 3/400 V, 50 Hz, Hand wheel feedback signal 4...20 mA incl. mounting kit for actuator	▲		▲		▲		▲	
	Electronic positioning controller input signal 0/4-20 mA incl. feedback signal 0/4-20 mA	✆		✆		✆		✆	
	Actuator DR59-D-40-Ex (II2G EExde IICT4) acc. to ATEX 95, 3/400 V, 50 Hz, Hand wheel, Potentiometer 1 kOhm incl. mounting-kit for actuator and base plate	✆		✆		✆		✆	
	UL/CSA - design	✆		✆		✆		✆	
Stroke frequency adjustment electrical	Frequency converter series 8200 Vector input 4-20 mA, incl. Keypad (for integration into control cabinet)								
	3-phase 320-550 V, +/- 0%, 50/60 Hz — 0,75 kW	▲		–		–		–	
	3-phase 320-550 V, +/- 0%, 50/60 Hz — 2,2 kW	–		▲		▲		▲	

● = Basis design – = not available ▲ = with add. price ✆ = on request ❍ = without add. price Art.-No. = available in basic design/ accessories

© 2015 sera GmbH
Subject to technical modifications.

Fittings for suction side of dosing pumps		R510.1 -4,9KM up to R510.1-65KM		R510.1 -150KM		R510.1 -300KM		R510.1 -600KM		R510.1 -950KM		R510.1 -1300KM	
		Type	P.	Type	P.	Type	P.	Type	P.	Type	P.	Type	P.
Pulsation damper without separating diaphragm	1.4571	✆		✆		✆		✆		✆		✆	
Suction lance	with level switch 1-stage	SL-02	3.30	SL-02	3.30	✆		✆		✆		✆	
	without level switch	S-01	3.34	S-01	3.34	S-01	3.34	S-01	3.34	S-01	3.34	S-01	3.34
Priming aid / Siphon Vessel		✆		✆		✆		✆		✆		✆	
Calibration pot	PVC-U	793.1	3.56	794.1	3.56	795.1	3.56	795.1	3.56	795.1	3.56	796.1	3.56
Foot valve	1.4571	731	3.60	731	3.60	732	3.60	732	3.60	733	3.60	733	3.60
Line strainer	1.4408	✆		✆		✆		✆		✆		✆	

Fittings for pressure side of dosing pumps		R510.1 -4,9KM up to R510.1-65KM		R510.1 -150KM		R510.1 -300KM		R510.1 -600KM		R510.1 -950KM		R510.1 -1300KM	
		Type	P.	Type	P.	Type	P.	Type	P.	Type	P.	Type	P.
Pulsation damper without separating diaphragm	1.4571	✆		✆		✆		✆		✆		✆	
Diaphragm pulsation damper with PTFE/PTFE-faced diaphragm	1.4571	✆		✆		✆		✆		✆		✆	
Diaphragm pulsation damper with Elastomer-diaphragm	1.4571	✆		810.1-0,32/...	3.22	810.1-0,32/...	3.22	810.1-0,75/...	3.22	810.1-2,0/...	3.22	810.1-2,0/...	3.22
Check valve	1.4571	✆		✆		✆		✆		✆		✆	
Dosing valve	1.4571	✆		✆		✆		✆		✆		✆	
Safety valve		✆		✆		✆		✆		✆		✆	

✆ = on request

The above allocation considers the fittings which have to be used at least regarding their nominal width in order to ensure the safe and trouble-free operation of the respective pumps when feeding liquids which are resembling to water.
Absolutely note the max. admissible operating pressure of the fittings.
The use of fittings of a bigger nominal width is unproblematically possible in most cases.
When choosing the fittings note the installation instructions for dosing pumps or confer with **sera**.

© 2015 **sera GmbH**
Subject to technical modifications.

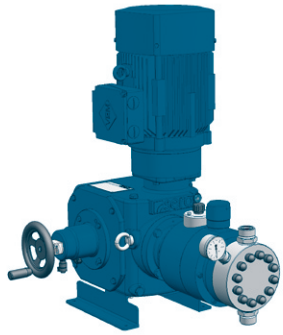

R511.1-...KM in survey

- Multi-layer diaphragm technology
- High dosing accuracy
- Safe to run dry
- Integrated diaphragm monitoring
- Internal overload protection
- High quality materials
- Leakage free
- Low maintenance
- Manual stroke length adjustment
- Robust metallic housing

Infobox

Order information	Page 2.120
Options/accessories	Page 2.120
Fittings-allocation	Page 2.123
Connecting pieces	Chapter 4
Resistance chart	Chapter 5
Installation examples	Chapter 5

2

Technical data

Type	Nominal capacity*				Nominal stroke frequency		Capacity per stroke	Admissible Counterpressure	
	50 Hz		60 Hz		50 Hz	60 Hz			
	l/h	gal/h	l/h	gal/h	1/min	1/min	ml/stroke	bar	psi
R511.1- 100 KM	100	26,42	120	31,70	125	150	13,3	220	3190
R511.1- 220 KM	220	58,12	264	69,74	125	150	29,3	160	2320
R511.1- 440 KM	440	116,24	528	139,48	125	150	58,6	85	1232,5
R511.1- 900 KM	900	237,75	1080	282,31	125	150	120,0	40	580
R511.1- 1450 KM	1450	383,05	1740	459,66	125	150	203,6	25	362,5
R511.1- 1650 KM	1650	435,88	-	-	125	150	226,8	20	290

- * For designs according to API an output reserve to 10 % has to be considered.

Type	Admissible pressure at pump inlet		Max. Suction height	Inlet/ Outlet nominal width	Max. stroke length		Motor output
	bar	psi	mWC	DN	mm	in	kW
R511.1- 100 KM	-0,3/1	-4,3/14,5	3	15	32	1,26	4,0
R511.1- 220 KM	-0,3/1	-4,3/14,5	3	15	32	1,26	5,5
R511.1- 440 KM	-0,3/1	-4,3/14,5	3	20	32	1,26	7,5
R511.1- 900 KM	-0,3/1	-4,3/14,5	3	32	32	1,26	7,5
R511.1- 1450 KM	-0,3/1	-4,3/14,5	3	32	32	1,26	7,5
R511.1- 1650 KM	-0,3/1	-4,3/14,5	3	32	32	1,26	7,5

© 2015 sera GmbH
Subject to technical modifications.

Dimensional drawing

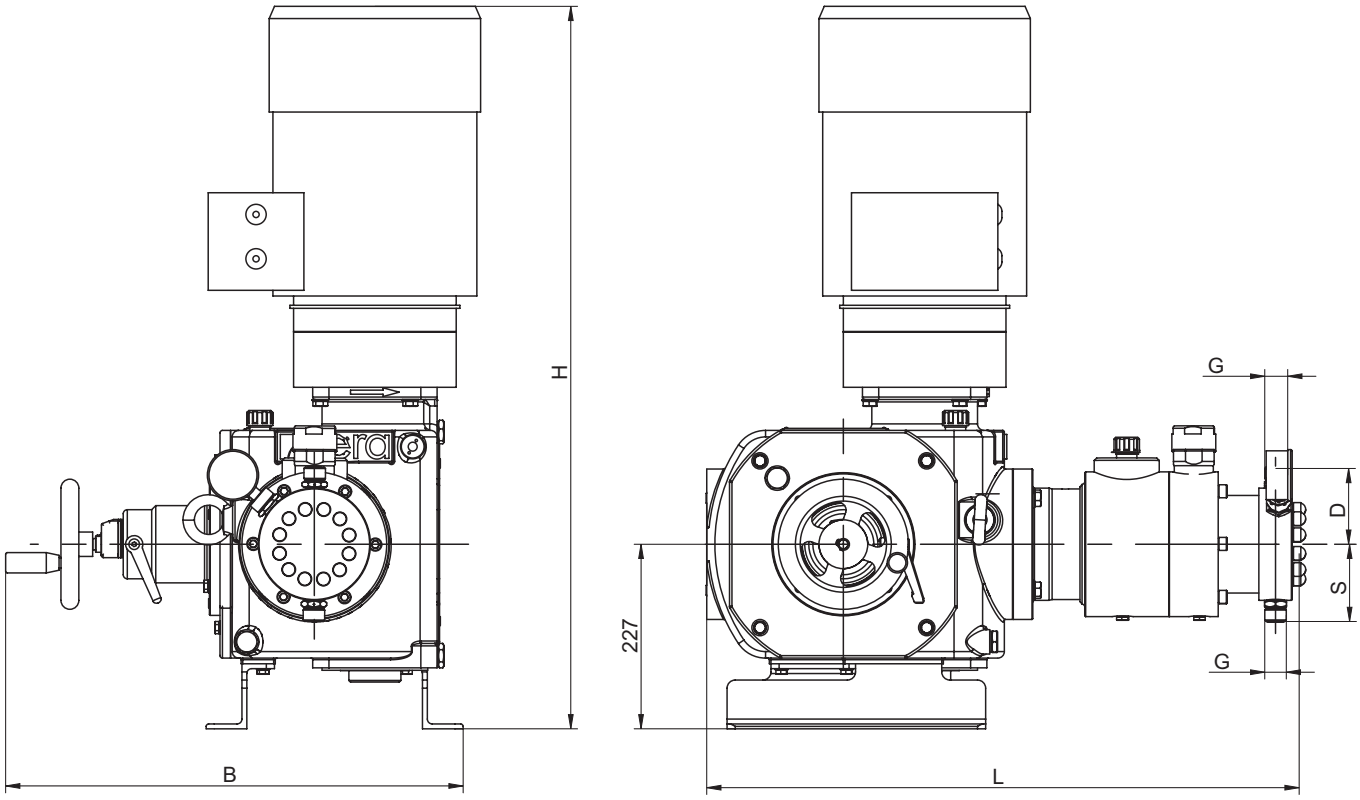

Dimensional chart

Indications in mm / inch

Type	G	S		D	
		mm	in	mm	in
R511.1- 100 KM	G 3/4	97	3,82	104	4,09
R511.1- 220 KM	G 1 1/4	128	5,04	128	5,04
R511.1- 440 KM	G 1 1/4	138	5,43	138	5,43
R511.1- 900 KM*	-	-	-	-	-
R511.1- 1450 KM*	-	-	-	-	-
R511.1- 1650 KM*	-	-	-	-	-

■ * available only with flange connection.

Type	L		B		H		Weight
	mm	in	mm	in	mm	in	approx. kg
R511.1- 100 KM	728	28,7	563	22,2	807	31,8	205
R511.1- 220 KM	775	30,5	563	22,2	873	34,4	245
R511.1- 440 KM	784	30,9	563	22,2	873	34,4	260
R511.1- 900 KM	843	33,2	563	22,2	873	34,4	300
R511.1- 1450 KM	843	33,2	563	22,2	873	34,4	305
R511.1- 1650 KM	843	33,2	563	22,2	873	34,4	310

■ Indication of weight for basic design acc. to order information

Flange connections with design acc. to API (without illustration)

Type	DIN		ANSI	
	Flange	Dimensions	Flange	Dimensions
R511.1- 100 KM	DN10	acc. to DIN EN 2501-1	1/2“	acc. to ANSI
R511.1- 220 KM	DN15	acc. to DIN EN 2501-1	1/2“	acc. to ANSI
R511.1- 440 KM	DN20	acc. to DIN EN 2501-1	3/4“	acc. to ANSI
R511.1- 900 KM	DN32	acc. to DIN EN 2501-1	1 1/4“	acc. to ANSI
R511.1- 1450 KM	DN32	acc. to DIN EN 2501-1	1 1/4“	acc. to ANSI
R511.1- 1900 KM	DN32	acc. to DIN EN 2501-1	1 1/4“	acc. to ANSI

© 2015 **sera GmbH**
Subject to technical modifications.

Order information

Basic design

R511.1-100KM
- Pump body 1.4571
- Double valve 1.4571/1.4581
- Valve balls 1.4401
- Valve sealings FPM
- Multi-layer diaphragm PTFE
- Optical diaphragm rupture indication with manometer

R511.1-220KM up to R511.1-440KM
- Pump body 1.4571
- Plate valve 1.4571
- Valve sealings FPM
- Multi-layer diaphragm PTFE
- Optical diaphragm rupture indication with manometer

R511.1-900KM up to R511.1-1650KM
- Pump body 1.4571
- Plate valve 1.4571
- Valve sealings FEP
- Multi-layer diaphragm PTFE
- Optical diaphragm rupture indication with manometer

Motor:
- 400/690V 50Hz, 460V 60Hz (delta) 3-phase, IP55, ISO F

Further options and accessories:
- Connection pieces see chapter 4
- Product documentation see chapter 5

Type	Basic design		×
	Article - No.		
R511.1- 100KM	**16016162**		
R511.1- 220KM	**16016163**		
R511.1- 440KM	**16016164**		
R511.1- 900KM	**16016165**		
R511.1- 1450KM	**16016166**		
R511.1- 1650KM	**16016167**		

2

Options/Accessories			R511.1-100KM	×	R511.1-220KM R511.1-440KM	×	R511.1-900KM	×	R511.1-1450KM R511.1-1650KM	×
Pump body and valves	Pump body 1.4571	Single valve 1.4571	●		–		–		–	
		Plate valve 1.4571/1.4581	–		●		●		●	
Pump body and valves acc. to API675	Pump body 1.4571	Single valve 1.4571 (DIN-flange)	✆		–		–		–	
		Single valve 1.4571 (ANSI-flange)	✆		–		–		–	
		Plate valve 1.4571 (DIN-flange)	–		✆		●		●	
		Plate valve 1.4571 (ANSI-flange)	–		✆		✆		✆	
Valve balls 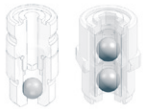	1.4401	Single valve	●		–		–		–	
Valve sealings 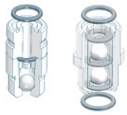	FEP-covered	Single valve	✆		–		–		–	
		Plate valve	–		✆		●		●	
Diaphragm monitoring	optical diaphragm rupture indicator with manometer		●		●		●		●	
	Pressure switch IP 65		✆		✆		✆		✆	
	Pressure switch II2G EExd IIC T5 or T6 acc. to ATEX95		✆		✆		✆		✆	
Stroke frequency monitoring 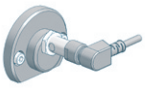	10-60 V DC, three-wire, PNP		✆		✆		✆		✆	
	Namur execution, II2G EExia IICT6 acc. to ATEX95		✆		✆		✆		✆	

● = Basis design – = not available ▲ = with add. price ✆ = on request ❍ = without add. price Art.-No. = available in basic design/ accessories

© 2015 **sera GmbH**
Subject to technical modifications.

Order information

Basic design

R511.1-100KM
- Pump body 1.4571
- Double valve 1.4571/1.4581
- Valve balls 1.4401
- Valve sealings FPM
- Multi-layer diaphragm PTFE
- Optical diaphragm rupture indication with manometer

R511.1-220KM up to R511.1-440KM
- Pump body 1.4571
- Plate valve 1.4571
- Valve sealings FPM
- Multi-layer diaphragm PTFE
- Optical diaphragm rupture indication with manometer

R511.1-900KM up to R511.1-1650KM
- Pump body 1.4571
- Plate valve 1.4571
- Valve sealings FEP
- Multi-layer diaphragm PTFE
- Optical diaphragm rupture indication with manometer

Motor:
- 400/690V 50Hz, 460V 60Hz (delta) 3-phase, IP55, ISO F

Further options and accessories:
- Connection pieces see chapter 4
- Product documentation see chapter 5

Type	Basic design	×
	Article - No.	
R511.1- 100KM	**16016162**	
R511.1- 220KM	**16016163**	
R511.1- 440KM	**16016164**	
R511.1- 900KM	**16016165**	
R511.1- 1450KM	**16016166**	
R511.1- 1650KM	**16016167**	

Options/Accessories		R511.1-100KM	×	R511.1-220KM R511.1-440KM	×	R511.1-900KM	×	R511.1-1450KM R511.1-1650KM	×
Drive motor	Special voltage	✆		✆		✆		✆	
	Enclosure IP 65	✆		✆		✆		✆	
	Protective roof for the fan of the drive	✆		✆		✆		✆	
	integrated PTC-thermistor (3 pcs.) insul. cl. F	✆		✆		✆		✆	
	VIK-design	✆		✆		✆		✆	
	II2G EExe IIT4 (acc. to ATEX95)	✆		✆		✆		✆	
	II2G EExde IICT4 (acc. to ATEX95)	✆		✆		✆		✆	
	electrical acc. to uL / CSA	✆		✆		✆		✆	
	Drive for converter operation incl. integrated PTC-thermistor, 5-50/60Hz	✆		✆		✆		✆	
	Drive for converter operation II2G EExde IICT4, 5-60 Hz gem. ATEX 95, incl. integrated PTC-thermistor	✆		✆		✆		✆	

● = Basis design – = not available ▲ = with add. price ✆ = on request ❍ = without add. price Art.-No. = available in basic design/ accessories

© 2015 **sera GmbH**
Subject to technical modifications.

Order information

Basic design

R511.1-100KM
- Pump body 1.4571
- Double valve 1.4571/1.4581
- Valve balls 1.4401
- Valve sealings FPM
- Multi-layer diaphragm PTFE
- Optical diaphragm rupture indication with manometer

R511.1-220KM up to R511.1-440KM
- Pump body 1.4571
- Plate valve 1.4571
- Valve sealings FPM
- Multi-layer diaphragm PTFE
- Optical diaphragm rupture indication with manometer

R511.1-900KM up to R511.1-1650KM
- Pump body 1.4571
- Plate valve 1.4571
- Valve sealings FEP
- Multi-layer diaphragm PTFE
- Optical diaphragm rupture indication with manometer

Motor:
- 400/690V 50Hz, 460V 60Hz (delta) 3-phase, IP55, ISO F

Further options and accessories:
- Connection pieces see chapter 4
- Product documentation see chapter 5

Type	Basic design		×
	Article - No.		
R511.1- 100KM	**16016162**		
R511.1- 220KM	**16016163**		
R511.1- 440KM	**16016164**		
R511.1- 900KM	**16016165**		
R511.1- 1450KM	**16016166**		
R511.1- 1650KM	**16016167**		

2

Options/Accessories		R511.1-100KM	×	R511.1-220KM R511.1-440KM	×	R511.1-900KM	×	R511.1-1450KM R511.1-1650KM	×
Stroke length adjustment electrical 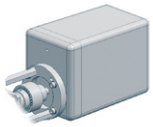	Actuator DR59-D-40 3/400 V, 50 Hz, mech. position indicator, position feedback 4..20m incl. mounting kit for actuator	✆		✆		✆		✆	
	Electronic positioning controller input signal 0/4-20 mA incl. feedback signal 0/4-20 mA	✆		✆		✆		✆	
	Actuator DR59-D-40Ex (II2G EExde IICT4) acc. to ATEX 95, 3/400 V, 50 Hz, position feedback 4..20m, Mech. position indicator incl. mounting-kit for actuator	✆		✆		✆		✆	
	UL/CSA - design	✆		✆		✆		✆	
Stroke frequency adjustment electrical	Frequency converter series 8200 Vector input 4-20mA, incl. Keypad (for integration into control cabinet)								
	3-phase 320-550 V, +/- 0%, 50/60 Hz — 4,0 kW	✆		–		–		–	
	3-phase 320-550 V, +/- 0%, 50/60 Hz — 5,5 kW	–		✆		–		–	
	3-phase 320-550 V, +/- 0%, 50/60 Hz — 7,5 kW	–		–		✆		✆	

● = Basis design – = not available ▲ = with add. price ✆ = on request ❍ = without add. price Art.-No. = available in basic design/ accessories

© 2015 **sera GmbH**
Subject to technical modifications.

Fittings for suction side of dosing pumps		R511.1 -100KM		R511.1 -220KM		R511.1 -440KM		R511.1 -900KM		R511.1 -1450KM		R511.1 -1650KM	
		Type	P.	Type	P.	Type	P.	Type	P.	Type	P.	Type	P.
Pulsation damper without separating diaphragm	1.4571	✆		✆		✆		✆		✆		✆	
Suction lance	with level switch 1-stage	✆		✆		✆		✆		✆		✆	
	without level switch	S-01	3.34	S-01	3.34	S-01	3.34	S-01	3.34	S-01	3.34	✆	
Priming aid / Siphon Vessel		✆		✆		✆		✆		✆		✆	
Calibration pot	PVC-U	793.1	3.56	794.1	3.56	795.1	3.56	796.1	3.56	796.1	3.56	797.1	3.56
Foot valve	1.4571	731	3.60	731	3.60	732	3.60	733	3.60	734	3.60	735	3.60
Line strainer	1.4408	✆		✆		✆		✆		✆		✆	

Fittings for pressure side of dosing pumps		R511.1 -100KM		R511.1 -220KM		R511.1 -440KM		R511.1 -900KM		R511.1 -1450KM		R511.1 -1650KM	
		Type	P.	Type	P.	Type	P.	Type	P.	Type	P.	Type	P.
Pulsation damper without separating diaphragm	1.4571	✆		✆		✆		✆		✆		✆	
Diaphragm-pulsation damper with PTFE/PTFE-faced diaphragm	1.4571	✆		✆		✆		✆		✆		✆	
Diaphragm-pulsation damper with Elastomer-diaphragm	1.4571	✆		810.1-0,32/...	3.22	810.1-0,32/...	3.22	810.1-0,75/...	3.22	810.1-2,0/...	3.22	✆	
Check valve	1.4571	✆		✆		✆		✆		✆		✆	
Dosing valve	1.4571	✆		✆		✆		✆		✆		✆	
Safety valve		✆		✆		✆		✆		✆		✆	

The above allocation considers the fittings which have to be used at least regarding their nominal width in order to ensure the safe and trouble-free operation of the respective pumps when feeding liquids which are resembling to water.
Absolutely note the max. admissible operating pressure of the fittings.
The use of fittings of a bigger nominal width is unproblematically possible in most cases.
When choosing the fittings note the installation instructions for dosing pumps or confer with **sera**.

© 2015 **sera GmbH**
Subject to technical modifications.

© 2015 **sera GmbH**
Subject to technical modifications.

APB / APE 5

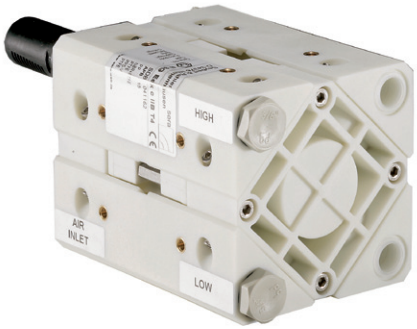

APB / APE 15

APB / APE 45

APB / APE 850

© 2015 **sera GmbH**
Subject to technical modifications.

Air driven pumps

Type	On stock	Pump body	Diaphragm	Valve balls	Valve seat	Valve seals	Art.-No. Pump	Art.-No. Spare parts set	x
APB-pumps									
APB-5	●	PP	NBR-PTFE	Pyrex	PP/PPS-V	PTFE	15000924	90039652	
APB-15	●	PP	NBR+PTFE	PTFE	PP	FPM	15002250	90039653	
APB-15	●	PP	NBR+PTFE	PTFE	PP	EPDM	15001423	90039655	
APB-15	●	ECTFE	NBR+PTFE	PTFE	ECTFE	FPM	15001645	90039656	
APB-30	●	PP	Santo-PTFE	PTFE	PP	PTFE	15004560	90039657	
APB-30	●	PVDF	Santo-PTFE	PTFE	PVDF	PTFE	15004561	90039658	
APB-30	●	AISI 316	Santo-PTFE	INOX	INOX	PTFE	15004562	90039659	
APB-45	●	PP	Santo-PTFE	PTFE	PP	PTFE	15004563	90039660	
APB-45	●	PVDF	Santo-PTFE	PTFE	PVDF	PTFE	15004564	90039664	
APB-45	●	AISI 316	Santo-PTFE	INOX	INOX	PTFE	15004197	90039667	
APB-100	●	PP	Santo-PTFE	PTFE	PP	PTFE	15004540	90039668	
APB-100	●	PVDF	Santo-PTFE	PTFE	PVDF	PTFE	15004565	90039669	
APB-150	●	PP	Santo-PTFE	PTFE	PP	PTFE	15004509	90039670	
APB-150		PVDF	Santo-PTFE	PTFE	PVDF	PTFE	15004566	90039671	
APB-150		AISI 316	Santo-PTFE	INOX	INOX	PTFE	15004567	90039672	
APB-340	●	PP	Santo-PTFE	PTFE	PP	PTFE	15004568	90039673	
APB-340		PVDF	Santo-PTFE	PTFE	PVDF	PTFE	15004569	90039674	
APB-340		AISI 316	Santo-PTFE	INOX	INOX	PTFE	15004570	90039675	
APB-650		PP	Santo-PTFE	PTFE	PP	PTFE	15004571	90039676	
APB-650		PVDF	Santo-PTFE	PTFE	PVDF	PTFE	15004572	90039677	
APB-650		AISI 316	Santo-PTFE	INOX	INOX	PTFE	15004573	90039678	
APB-850		PP	Santo-PTFE	PTFE	PP	FPM	15004574	90039680	
APB-850		PP	Santo-PTFE	PTFE	PP	EPDM	15004575	90039681	
APB-850		PVDF	Santo-PTFE	PTFE	PVDF	FPM	15004576	90039682	
APB-850		AISI 316	Santo-PTFE	INOX	INOX	PTFE	15004577	90039684	

Connection pieces
■ per pump two pieces are needed

Type	Connections pump	Hose nozzle PVC-U			Transition sleeve nipple PVC-U		
		d - d1 - G	Article-No.		d / D - G	Article-No.	
AP-5	G 1/4	14 - 12 - G 1/4	90028894		12 / 16 -G 1/4	90039947	
AP-15	G 3/8	18 - 16 - G 3/8	90039940		16 / 20 - G 3/8	90039948	
AP-30	G 1/2	22 - 20 - G 1/2	90020768		20 / 25 - G 1/2	90039949	
AP-45	G 1/2	22 - 20 - G 1/2	90020768		20 / 25 - G 1/2	90039949	
AP-100	G1	34 - 31 - G1	90039943		32 / 40 - G1	90039950	
AP-150	G1	34 - 31 - G1	90039943		32 / 40 - G1	90039950	
AP-340	G1	53 - 50 - G1 1/2	90039945		50 / 63 - G1 1/2	90039952	
AP-650	G2	66 - 60 - G2	90039946		63 / 75 - G2	90039953	
AP-850	G3	-	-		90 / 110 - G3	90039954	

■ Please find the detailed prices for options and accessories at the specific pump site

© 2015 **sera GmbH**
Subject to technical modifications.

Type	Pump body	Diaphragm	Valve balls	Valve seat	Valve seals	Art.-No. Pump	Art.-No. Spare parts set	×
APE-pumps								
APE-5	PP-CFK	NBR-PTFE	Pyrex	PP/PPS-V	PTFE	15004578	90039652	
APE-15	PP-CFK	NBR+PTFE	PTFE	PP	FPM	15000961	90039653	
APE-15	PP-CFK	NBR+PTFE	PTFE	PP	EPDM	15000962	90039655	
APE-15	ECTFE	NBR+PTFE	PTFE	ECTFE	FPM	15004579	90039656	
APE-30	PP-CFK	Santo-PTFE	PTFE	PP	PTFE	15004580	90039657	
APE-30	PVDF	Santo-PTFE	PTFE	PVDF	PTFE	15004581	90039658	
APE-30	AISI 316	Santo-PTFE	INOX	INOX	PTFE	15004582	90039659	
APE-45	PP-CFK	Santo-PTFE	PTFE	PP	PTFE	15004583	90039660	
APE-45	PVDF-CFK	Santo-PTFE	PTFE	PVDF	PTFE	15004584	90039664	
APE-45	AISI 316	Santo-PTFE	INOX	INOX	PTFE	15004585	90039667	
APE-100	PP-CFK	Santo-PTFE	PTFE	PP	PTFE	15004586	90039668	
APE-100	PVDF	Santo-PTFE	PTFE	PVDF	PTFE	15004587	90039669	
APE-150	PP-CFK	Santo-PTFE	PTFE	PP	PTFE	15004588	90039670	
APE-150	PVDF	Santo-PTFE	PTFE	PVDF	PTFE	15004589	90039671	
APE-150	AISI 316	Santo-PTFE	INOX	INOX	PTFE	15004590	90039672	
APE-340	PP-CFK	Santo-PTFE	PTFE	PP	PTFE	15004591	90039673	
APE-340	PVDF	Santo-PTFE	PTFE	PVDF	PTFE	15004592	90039674	
APE-340	AISI 316	Santo-PTFE	INOX	INOX	PTFE	15004593	90039675	
APE-650	PP-CFK	Santo-PTFE	PTFE	PP	PTFE	15004594	90039676	
APE-650	PVDF	Santo-PTFE	PTFE	PVDF	PTFE	15004595	90039677	
APE-650	AISI 316	Santo-PTFE	INOX	INOX	PTFE	15004596	90039678	
APE-850	PP-CFK	Santo-PTFE	PTFE	PP	FPM	15004597	90039680	
APE-850	PP-CFK	Santo-PTFE	PTFE	PVDF	EPDM	15004598	90039681	
APE-850	PVDF	Santo-PTFE	PTFE	PVDF	FPM	15004599	90039682	
APE-850	AISI 316	Santo-PTFE	INOX	INOX	PTFE	15004600	90039684	

Connection pieces
■ per pump two pieces are needed

Type	Connections pump	Hose nozzle PVC-U			Transition sleeve nipple PVC-U		
		d - d1 - G	Article-No.		d / D - G	Article-No.	
AP-5	G 1/4	14 - 12 - G 1/4	90028894		12 / 16 -G 1/4	90039947	
AP-15	G 3/8	18 - 16 - G 3/8	90039940		16 / 20 - G 3/8	90039948	
AP-30	G 1/2	22 - 20 - G 1/2	90020768		20 / 25 - G 1/2	90039949	
AP-45	G 1/2	22 - 20 - G 1/2	90020768		20 / 25 - G 1/2	90039949	
AP-100	G1	34 - 31 - G1	90039943		32 / 40 - G1	90039950	
AP-150	G1	34 - 31 - G1	90039943		32 / 40 - G1	90039950	
AP-340	G1	53 - 50 - G1 1/2	90039945		50 / 63 - G1 1/2	90039952	
AP-650	G2	66 - 60 - G2	90039946		63 / 75 - G2	90039953	
AP-850	G3	-	-		90 / 110 - G3	90039954	

■ Please find the detailed prices for options and accessories at the specific pump site

© 2015 **sera GmbH**
Subject to technical modifications.

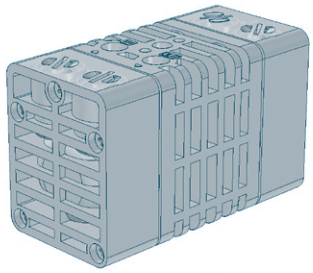

AP series in survey

- Cost-effective
- Leakage-free
- Safe against overpressure
- Low-maintenance continuous duty
- Design according to ATEX
- Safe to run dry
- Dry priming
- High-quality materials
- Robust
- Silicone-free

Infobox

Order information Page 2.129
Options/accessories Page 2.129
Connecting pieces Chapter 4
Resistance chart Chapter 5
Installation examples Chapter 5

Technical data

Type	Max. flow capacity		Admiss. counterpressure		Max. air supply		Control air connection	Max. suction height dry	Max. suction height wet	ATEX95
	l/min	gal/min	bar	psi	bar	psi		m	m	
APB-5	5	1,32	7	101,5	7	101,5	G 1/8	3	7	II 3G EEx c IIB T4
APE-5	5	1,32	7	101,5	7	101,5	G 1/8	3	7	II 2G EEx c IIB T4

2

Dimensional drawing

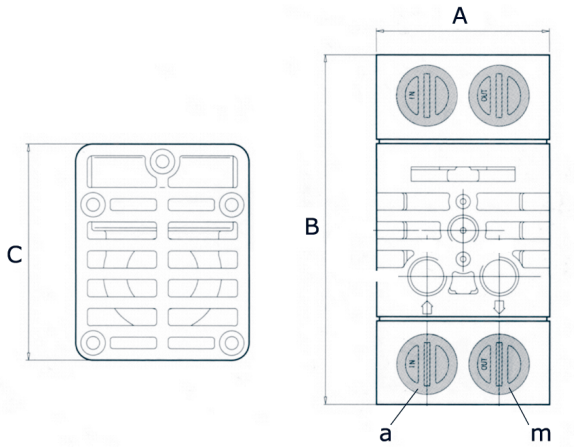

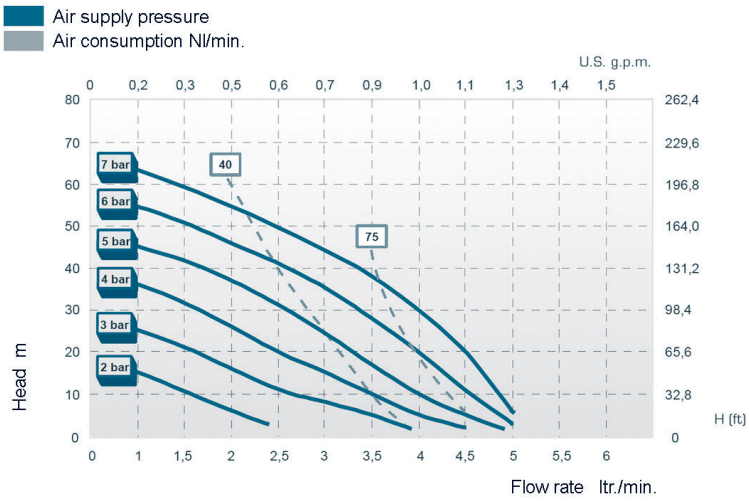

Dimensional chart

Indications in mm / inch

Type	Connections	A		B		C		Weight
	m/a	mm	in	mm	in	mm	in	kg
APB-5	G 1/4	60	2,36	120	4,72	75	2,95	0,5
APE-5	G 1/4	60	2,36	120	4,72	75	2,95	0,5

© 2015 sera GmbH
Subject to technical modifications.

Order information

Type	Pump body	Diaphragm	Valve balls	Valve seat	Valve seals	Art.-No. Pump	Art.-No. Spare parts set	x
APB-5	PP	NBR-PTFE	Pyrex	PP/PPS-V	PTFE	15000924	90039652	
APE-5	PP-CFK	NBR-PTFE	Pyrex	PP/PPS-V	PTFE	15004578	90039652	

Options/accessories					AP-5 Art.-No.	x
Diaphragm-pulsation damper 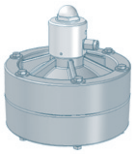	**Type**	**Connection**	**Housing**	**Diaphragm**		
	MPD-25.1	G 3/4	PP [1]	Hytrel+PTFE	37602429	
			PP-CFK [2]	Hytrel+PTFE	▲	
			PVDF-CFK [2]	Santoprene+PTFE	37603757	
		[1] II 3G EEx c IIB T4 [2] II 2G EEx c IIB T4	PPS-V [1]	Hytrel+PTFE	37602431	
Air supply pressure unit 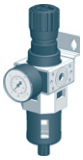	Filter pressure controller, shut-off valve and check valve, fittings and 5 m pneumatic hose incl.				90019599	
	as above but with solenoid valve incl. double nipple [3] [3] design for hazardous areas on request			24 V	90020022	
				230 V	90020015	
Connection pieces	**Connections pump**	**Connection piece**		**Connections connection piece**		
	G 1/4	Hose nozzle PVC-U		d - d1 - G	90028894	
				14 - 12 - G 1/4		
		Transition sleeve nipple PVC - U		d / D - G	90039947	
				12 / 16 - G 1/4		
■ per pump two pieces are needed						

● = Basis design – = not available ▲ = with add. price ✆ = on request ❍ = without add. price Art.-No. = available in basic design/ accessories

2

© 2015 **sera GmbH**
Subject to technical modifications.

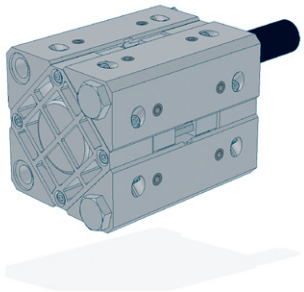

AP series in survey

- Cost-effective
- Leakage-free
- Safe against overpressure
- Low-maintenance continuous duty
- Design according to ATEX
- Safe to run dry
- Dry priming
- High-quality materials
- Robust
- Silicone-free

Infobox

Order information Page 2.131
Options/accessories Page 2.131
Connecting pieces Chapter 4
Resistance chart Chapter 5
Installation examples Chapter 5

Technical data

Type	Max. flow capacity		Admiss. counterpressure		Max. air supply		Control air connection	Max. suction height dry	Max. suction height wet	ATEX95
	l/min	gal/min	bar	psi	bar	psi		m	m	
APB-15	15	3,96	7	101,5	7	101,5	G 3/8	3	7	II 3G EEx c IIB T4
APE-15	15	3,96	7	101,5	7	101,5	G 3/8	3	7	II 2G EEx c IIB T4

2

Dimensional drawing

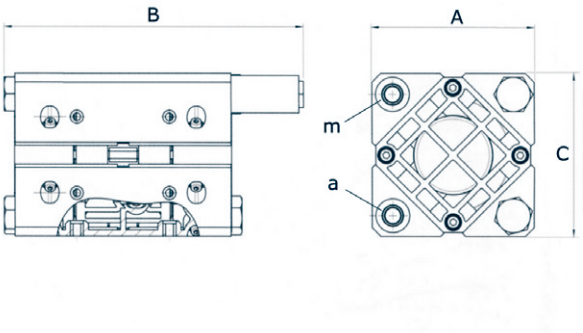

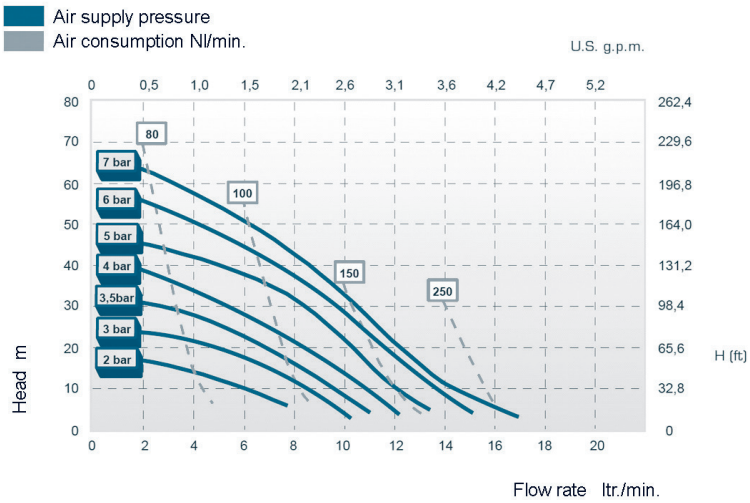

Dimensional chart

Indications in mm / inch

Type	Connections m/a	A		B		C		Weight	
		mm	in	mm	in	mm	in	kg	kg
APB-15	G 3/8	105	4,13	194	7,64	105	4,13	1	1,5
APE-15	G 3/8	105	4,13	194	7,64	105	4,13	1	1,5

© 2015 sera GmbH
Subject to technical modifications.

Order information

Type	Pump body	Diaphragm	Valve balls	Valve seat	Valve seals	Art.-No. Pump	Art.-No. Spare parts set	×
APB-15	PP	NBR+PTFE	PTFE	PP	FPM	15002250	90039653	
APB-15	PP	NBR+PTFE	PTFE	PP	EPDM	15001423	90039655	
APB-15	ECTFE	NBR+PTFE	PTFE	ECTFE	FPM	15001645	90039656	
APE-15	PP-CFK	NBR+PTFE	PTFE	PP	FPM	15000961	90039653	
APE-15	PP-CFK	NBR+PTFE	PTFE	PP	EPDM	15000962	90039655	
APE-15	ECTFE	NBR+PTFE	PTFE	ECTFE	FPM	15004579	90039656	

Options/accessories					AP-15 Art.-No.	×
Diaphragm-pulsation damper 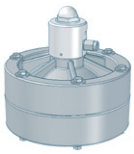	**Type**	**Connection**	**Housing**	**Diaphragm**		
	MPD-25.1	G 3/4	PP [1]	Hytrel+PTFE	**243,00** 37602429	
			PP-CFK [2]	Hytrel+PTFE	▲	
			PVDF-CFK [2]	Santoprene+PTFE	37603757	
		[1] II 3G EEx c IIB T4 [2] II 2G EEx c IIB T4	PPS-V [1]	Hytrel+PTFE	37602431	
Air supply pressure unit 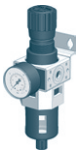	Filter pressure controller, shut-off valve and check valve, fittings and 5 m pneumatic hose incl.				90019997	
	as above but with solenoid valve incl. double nipple [3]			24 V	90020023	
				230 V	90020016	
	[3] design for hazardous areas on request					
Connection pieces	**Connections pump**	**Connection piece**		**Connections connection piece**		
	G 3/8	Hose nozzle PVC-U		d - d1 - G	90039940	
				18 - 16 - G 3/8		
		Transition sleeve nipple PVC - U		d / D - G	90039948	
				16 / 20 - G 3/8		
	■ per pump two pieces are needed					

● = Basis design – = not available ▲ = with add. price ✆ = on request ❍ = without add. price Art.-No. = available in basic design/ accessories

2

© 2015 **sera GmbH**
Subject to technical modifications.

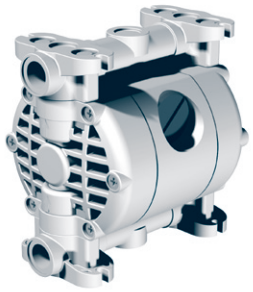

AP series in survey

- Cost-effective
- Leakage-free
- Safe against overpressure
- Low-maintenance continuous duty
- Design according to ATEX
- Safe to run dry
- Dry priming
- High-quality materials
- Robust
- Silicone-free

Infobox

Order information Page 2.133
Options/accessories Page 2.133
Connecting pieces Chapter 4
Resistance chart Chapter 5
Installation examples Chapter 5

Technical data

Type	Max. flow capacity		Admiss. counterpressure		Max. air supply		Control air connection	Max. suction height dry	Max. suction height wet	ATEX95
	l/min	gal/min	bar	psi	bar	psi		m	m	
APB-30	30	7,93	7	101,5	7	101,5	G 1/4	7	5	II 3G EEx c IIB T4
APE-30	30	7,93	7	101,5	7	101,5	G 1/4	7	5	II 3G EEx c IIB T4

2

Dimensional drawing

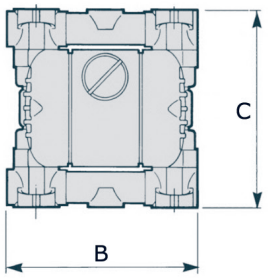

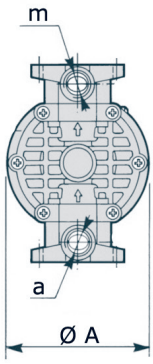

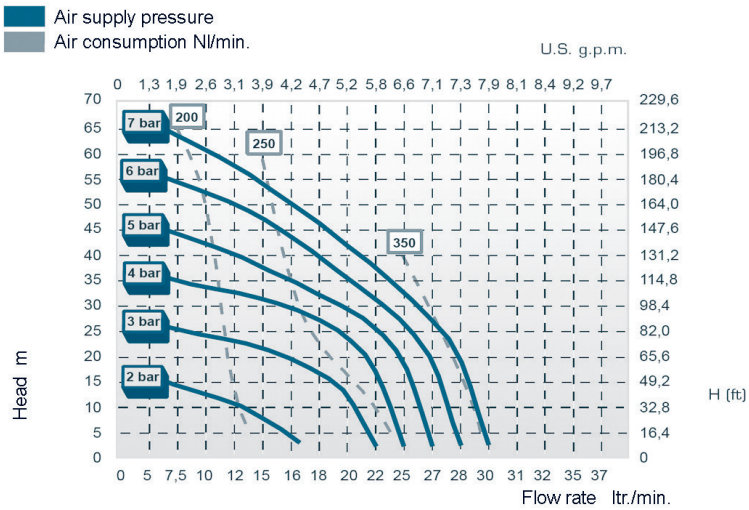

Dimensional chart

Indications in mm / inch

Type	Connections	A		B		C		Weight kg
	m/a	mm	in	mm	in	mm	in	PP
APB-30	G 1/2	120	4,72	164,5	6,48	168	6,61	1,6
APE-30	G 1/2	120	4,72	164,5	6,48	168	6,61	1,6

© 2015 sera GmbH
Subject to technical modifications.

Order information

Type	Pump body	Diaphragm	Valve balls	Valve seat	Valve seals	Art.-No. Pump	Art.-No. Spare parts set	x
APB-30	PP	Santo-PTFE	PTFE	PP	PTFE	15004560	90039657	
APB-30	PVDF	Santo-PTFE	PTFE	PVDF	PTFE	15004561	90039658	
APB-30	AISI 316	Santo-PTFE	INOX	INOX	PTFE	15004562	90039659	
APE-30	PP-CFK	Santo-PTFE	PTFE	PP	PTFE	15004580	90039657	
APE-30	PVDF	Santo-PTFE	PTFE	PVDF	PTFE	15004581	90039658	
APE-30	AISI 316	Santo-PTFE	INOX	INOX	PTFE	15004582	90039659	

Options/accessories					APB-30 x Art.-No.		APE-30 x Art.-No.	
Diaphragm-pulsation damper 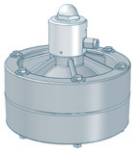	**Type**	**Connection**	**Housing**	**Diaphragm**				
	MPD-25.1	G 3/4	PP [1]	Hytrel+PTFE	37602429		37602429	
			PP-CFK [2]	Hytrel+PTFE	▲		▲	
			PVDF-CFK [2]	Santoprene+PTFE	37603757		37603757	
		[1] II 3G EEx c IIB T4 [2] II 2G EEx c IIB T4	PPS-V [1]	Hytrel+PTFE	37602431		37602431	
Air supply pressure unit 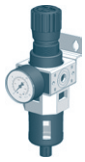	Filter pressure controller, shut-off valve and check valve, fittings and 5 m pneumatic hose incl.				90019998		90019998	
	as above but with solenoid valve incl. double nipple [3]			24 V	90020024		✆	
				230 V	90020017		✆	
	[3] design for hazardous areas on request							
Connection pieces	**Connections pump**		**Connection piece**	**Connections connection piece**				
	G 1/2		Hose nozzle PVC-U	d - d1 - G 22 - 20 - G 1/2	90020768		90020768	
			Transition sleeve nipple PVC - U	d / D - G 20 / 25 - G1/2	90039949		90039949	
	■ per pump two pieces are needed							

● = Basis design – = not available ▲ = with add. price ✆ = on request ❍ = without add. price Art.-No. = available in basic design/ accessories

2

© 2015 **sera GmbH**
Subject to technical modifications.

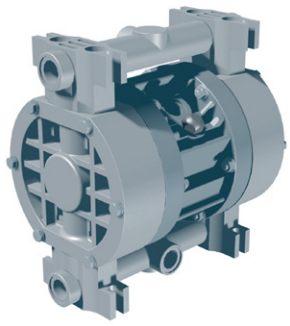

AP series in survey

- Cost-effective
- Leakage-free
- Safe against overpressure
- Low-maintenance continuous duty
- Design according to ATEX
- Safe to run dry
- Dry priming
- High-quality materials
- Robust
- Silicone-free

Infobox

Order information Page 2.135
Options/accessories Page 2.135
Connecting pieces Chapter 4
Resistance chart Chapter 5
Installation examples Chapter 5

Technical data

Type	Max. flow capacity		Admiss. counter-pressure		Max. air supply		Control air con-nection	Max. suction height dry	Max. suc-tion height wet	ATEX95
	l/min	gal/min	bar	psi	bar	psi		m	m	
APB-45	45	11,89	7	101,5	7	101,5	G 3/8	5	7	II 3G EEx c IIB T4
APE-45	45	11,89	7	101,5	7	101,5	G 3/8	5	7	II 2G EEx c IIB T4

2

Dimensional drawing

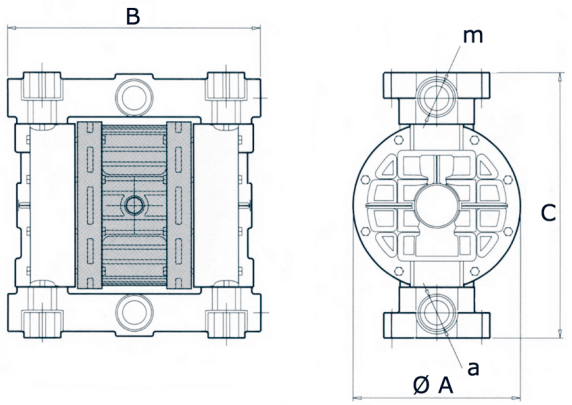

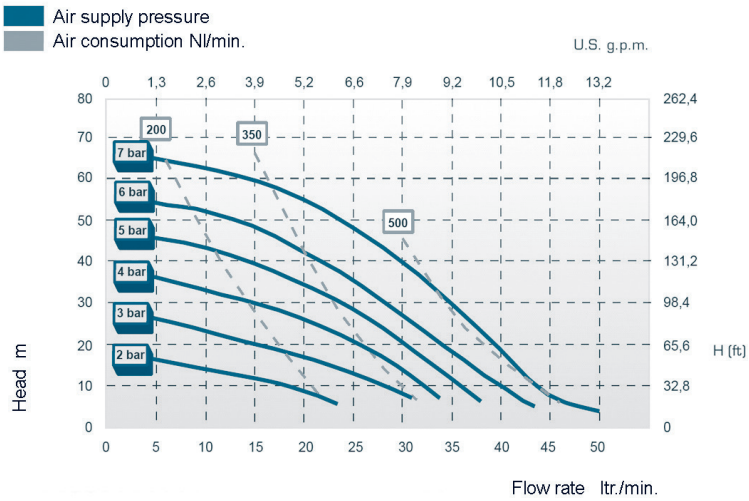

Dimensional chart

Indications in mm / inch

Type	Connections	A		B			
	m/a	mm	in	mm	in	mm	in
APB-45	G 1/2	150	5,91	240	9,45	210	8,27
APE-45	G 1/2	150	5,91	240	9,45	210	8,27

Type	C				Weight kg		
	mm	in	mm	in	PP	Aluminium	AISI316
APB-45	234	9,21	230	9,06	3,6	4,2	6,5
APE-45	234	9,21	230	9,06	3,6	4,2	6,5

© 2015 sera GmbH
Subject to technical modifications.

Order information

Type	Pump body	Diaphragm	Valve balls	Valve seat	Valve seals	Art.-No. Pump	Art.-No. Spare parts set	×
APB-45	PP	Santo-PTFE	PTFE	PP	PTFE	15004563	90039660	
APB-45	PVDF	Santo-PTFE	PTFE	PVDF	PTFE	15004564	90039664	
APB-45	AISI 316	Santo-PTFE	INOX	INOX	PTFE	15004197	90039667	
APE-45	PP-CFK	Santo-PTFE	PTFE	PP	PTFE	15004583	90039660	
APE-45	PVDF-CFK	Santo-PTFE	PTFE	PVDF	PTFE	15004584	90039664	
APE-45	AISI 316	Santo-PTFE	INOX	INOX	PTFE	15004585	90039667	

Options/accessories					APB-45 × Art.-No.	APE-45 × Art.-No.
Diaphragm-pulsation damper 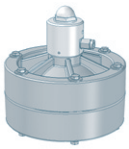	Type	Connection	Housing	Diaphragm		
	MPD-150	G 1	PP [1]	Hytrel+PTFE	37601310	37601310
			PP-CFK [2]	Hytrel+PTFE	▲	▲
			PVDF-CFK [2]	Santoprene+PTFE	37603480	✆
		[1] II 3G EEx c IIB T4 [2] II 2G EEx c IIB T4	PPS-V [1]	Hytrel+PTFE	▲	▲
Air supply pressure unit 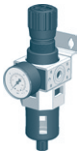	Filter pressure controller, shut-off valve and check valve, fittings and 5 m pneumatic hose incl.				90019600	90019600
	as above but with solenoid valve incl. double nipple [3] [3] design for hazardous areas on request			24 V	90020025	✆
				230 V	90020018	✆
Connection pieces	**Connections pump**	**Connection piece**		**Connections connection piece**		
	G 1/2	Hose nozzle PVC-U		d - d1 - G 22 - 20 - G 1/2	90020768	90020768
		Transition sleeve nipple PVC - U		d / D - G 20 / 25 - G1/2	90039949	90039949
	■ per pump two pieces are needed					
Stroke trans-mitting device	mounted on the pump				✆	✆

● = Basis design – = not available ▲ = with add. price ✆ = on request ❍ = without add. price Art.-No. = available in basic design/ accessories

2

© 2015 **sera GmbH**
Subject to technical modifications.

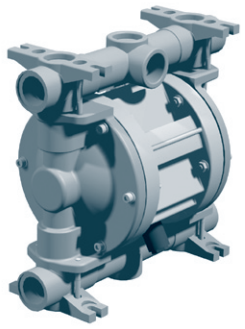

AP series in survey

- Cost-effective
- Leakage-free
- Safe against overpressure
- Low-maintenance continuous duty
- Design according to ATEX
- Safe to run dry
- Dry priming
- High-quality materials
- Robust
- Silicone-free

Infobox

Order information Page 2.137
Options/accessories Page 2.137
Connecting pieces Chapter 4
Resistance chart Chapter 5
Installation examples Chapter 5

Technical data

Type	Max. flow capacity		Admiss. counterpressure		Max. air supply		Control air connection	Max. suction height dry	Max. suction height wet	ATEX95
	l/min	gal/min	bar	psi	bar	psi		m	m	
APB-100	100	26,42	7	101,5	7	101,5	G 3/8	5	7	II 3G EEx c IIB T4
APE-100	100	26,42	7	101,5	7	101,5	G 3/8	5	7	II 2G EEx c IIB T4

2

Dimensional drawing

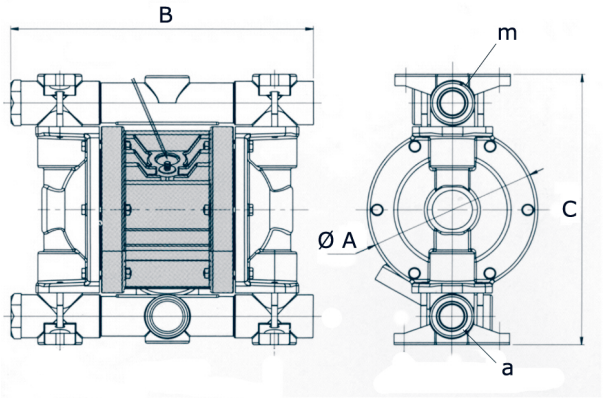

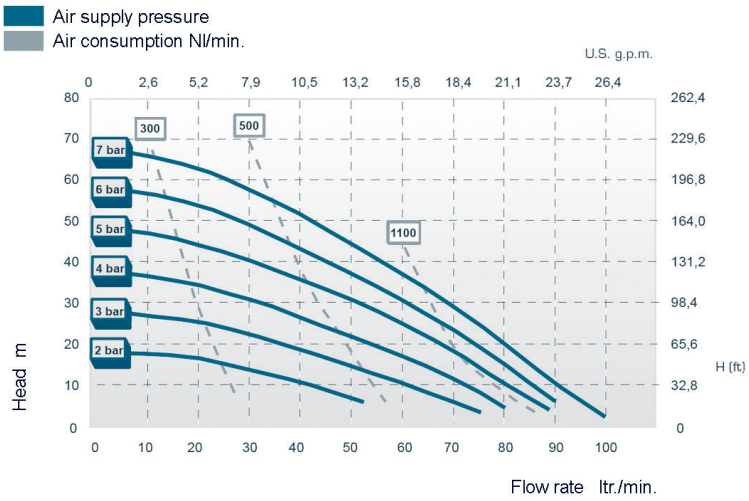

Dimensional chart

Alle Indications in mm

Type	Connections	A		B		C		Weight
	m/a	mm	in	mm	in	mm	in	kg
APB-100	G 1	170	6,69	300	11,81	276	10,87	6,5
APE-100	G 1	170	6,69	300	11,81	276	10,87	6,5

© 2015 sera GmbH
Subject to technical modifications.

Order information

Type	Pump body	Diaphragm	Valve balls	Valve seat	Valve seals	Art.-No. Pump	Art.-No. Spare parts set	×
APB-100	PP	Santo-PTFE	PTFE	PP	PTFE	15004540	90039668	
APB-100	PVDF	Santo-PTFE	PTFE	PVDF	PTFE	15004565	90039669	
APE-100	PP-CFK	Santo-PTFE	PTFE	PP	PTFE	15004586	90039668	
APE-100	PVDF	Santo-PTFE	PTFE	PVDF	PTFE	15004587	90039669	

Options/accessories					APB-100 × Art.-No.		APE-100 × Art.-No.	
Diaphragm-type pulsation damper 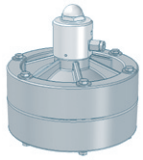	**Type**	**Connection**	**Housing**	**Diaphragm**				
	MPD-150	G 1	PP [1]	Hytrel+PTFE	37601310		37601310	
			PP-CFK [2]	Hytrel+PTFE	▲		▲	
			PVDF-CFK [2]	Santoprene+PTFE	37603480		✆	
		[1] II 3G EEx c IIB T4 [2] II 2G EEx c IIB T4	PPS-V [1]	Hytrel+PTFE	▲		▲	
Air supply pressure unit 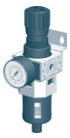	Filter pressure controller, shut-off valve and check valve, fittings and 5 m pneumatic hose incl.				90031418		90031418	
	as above but with solenoid valve incl. double nipple [3] [3] design for hazardous areas on request			24 V	90031420		✆	
				230 V	90031419		✆	
Connection pieces	**Connections pump**	**Connection piece**		**Connections connection piece**				
	G1	Hose nozzle PVC-U		d - d1 - G 34 - 31 - G1	90039943		90039943	
		Transition sleeve nipple PVC - U		d / D - G 32 - 40 - G1	90039950		90039950	
	■ per pump two pieces are needed							
Stroke transmitting device	mounted on the pump				✆		✆	

● = Basis design – = not available ▲ = with add. price ✆ = on request ❍ = without add. price Art.-No. = available in basic design/ accessories

2

© 2015 **sera GmbH**
Subject to technical modifications.

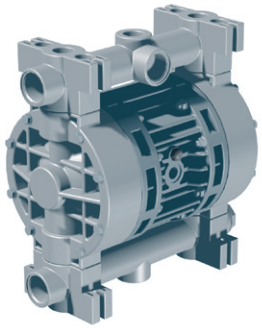

AP series in survey

- Cost-effective
- Leakage-free
- Safe against overpressure
- Low-maintenance continuous duty
- Design according to ATEX
- Safe to run dry
- Dry priming
- High-quality materials
- Robust
- Silicone-free

Infobox

Order information Page 2.139
Options/accessories Page 2.139
Connecting pieces Chapter 4
Resistance chart Chapter 5
Installation examples Chapter 5

Technical data

Type	Max. flow capacity		Admiss. counterpressure		Max. air supply		Control air connection	Max. suction height dry	Max. suction height wet	ATEX95
	l/min	gal/min	bar	psi	bar	psi		m	m	
APB-150	150	39,63	7	101,5	7	101,5	G 3/8	5	7	II 3G EEx c IIB T4
APE-150	150	39,63	7	101,5	7	101,5	G 3/8	5	7	II 2G EEx c IIB T4

2

Dimensional drawing

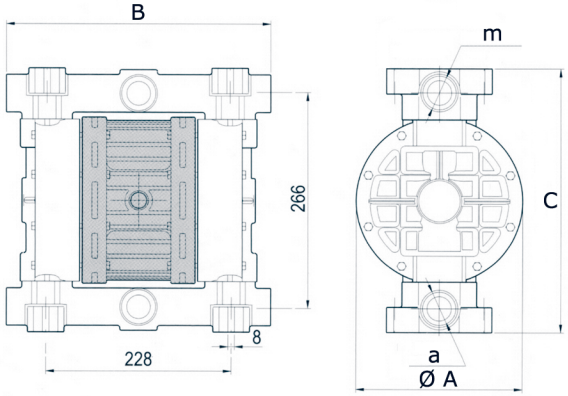

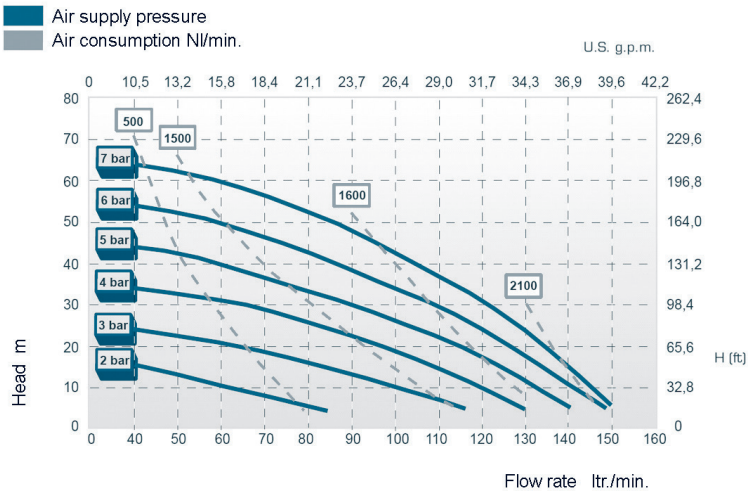

Dimensional chart

Alle Indications in mm

Type	Connections m/a	A		B		C		Weight kg
		mm	in	mm	in	mm	in	PP
APB-150	G 1	210	8,27	325	12,8	325	12,8	7,5
APE-150	G 1	210	8,27	325	12,8	325	12,8	7,5

© 2015 sera GmbH
Subject to technical modifications.

Order information

Type	Pump body	Diaphragm	Valve balls	Valve seat	Valve seals	Art.-No. Pump	Art.-No. Spare parts set	×
APB-150	PP	Santo-PTFE	PTFE	PP	PTFE	15004509	90039670	
APB-150	PVDF	Santo-PTFE	PTFE	PVDF	PTFE	15004566	90039671	
APB-150	AISI 316	Santo-PTFE	INOX	INOX	PTFE	15004567	90039672	
APE-150	PP-CFK	Santo-PTFE	PTFE	PP	PTFE	15004588	90039670	
APE-150	PVDF	Santo-PTFE	PTFE	PVDF	PTFE	15004589	90039671	
APE-150	AISI 316	Santo-PTFE	INOX	INOX	PTFE	15004590	90039672	

Options/accessories					APB-150 × Art.-No.	APE-150 × Art.-No.
Diaphragm-pulsation damper 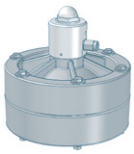	Type	Connection	Housing	Diaphragm		
	MPD-150	G 1	PP [1]	Hytrel+PTFE	37601310	37601310
			PP-CFK [2]	Hytrel+PTFE	▲	▲
			PVDF-CFK [2]	Santoprene+PTFE	37603480	✆
		[1] II 3G EEx c IIB T4 [2] II 2G EEx c IIB T4	PPS-V [1]	Hytrel+PTFE	▲	▲
Air supply pressure unit	Filter pressure controller, shut-off valve and check valve, fittings and 5 m pneumatic hose incl.				90031418	90031418
	as above but with solenoid valve incl. double nipple [3]			24 V	90031420	✆
				230 V	90031419	✆
	[3] design for hazardous areas on request					
Connection pieces	**Connections pump**	**Connection piece**		**Connections connection piece**		
	G1	Hose nozzle PVC-U		d - d1 - G	90039943	90039943
				34 - 34 - G1		
		Transition sleeve nipple PVC - U		d / D - G	90039950	90039950
				32 - 40 - G1		
	■ per pump two pieces are needed					
Stroke transmitting device	mounted on the pump				✆	✆

● = Basis design – = not available ▲ = with add. price ✆ = on request ❍ = without add. price Art.-No. = available in basic design/ accessories

2

© 2015 **sera GmbH**
Subject to technical modifications.

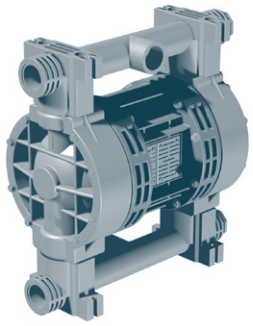

AP series in survey

- Cost-effective
- Leakage-free
- Safe against overpressure
- Low-maintenance continuous duty
- Design according to ATEX
- Safe to run dry
- Dry priming
- High-quality materials
- Robust
- Silicone-free

Infobox

Order information Page 2.141
Options/accessories Page 2.141
Connecting pieces Chapter 4
Resistance chart Chapter 5
Installation examples Chapter 5

Technical data

Type	Max. flow capacity		Admiss. counterpressure		Max. air supply		Control air connection	Max. suction height dry	Max. suction height wet	ATEX95
	l/min	gal/min	bar	psi	bar	psi		m	m	
APB-340	340	89,82	7	101,5	7	101,5	G 1/2	5	7	II 3G EEx c IIB T4
APE-340	340	89,82	7	101,5	7	101,5	G 1/2	5	7	II 2G EEx c IIB T4

2

Dimensional drawing

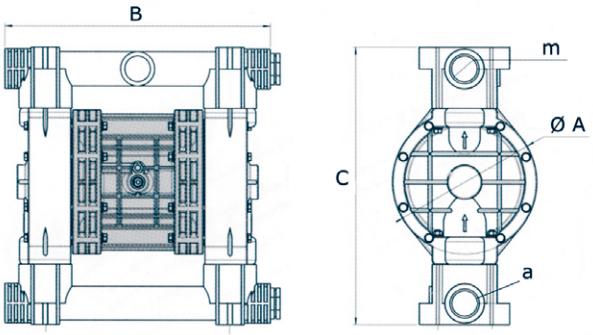

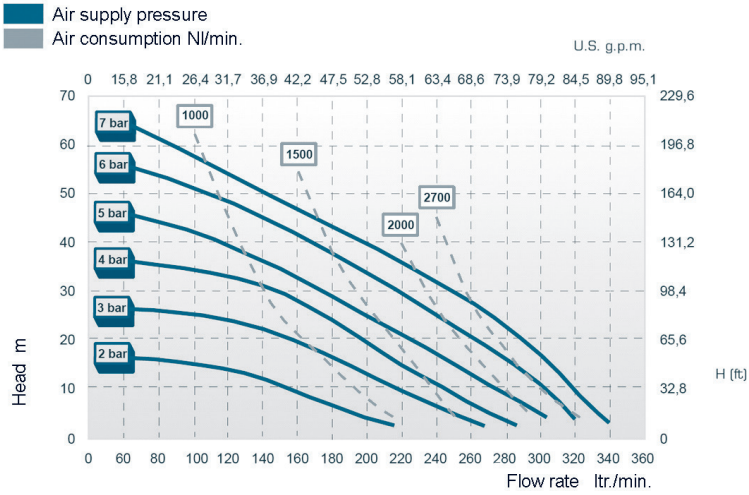

Dimensional chart

Indications in mm / inch

Type	Connections m/a	A				B			
		Plastic		Metal		Plastic		Metal	
		mm	in	mm	in	mm	in	mm	in
APB-340	G 1 1/2	260	10,24	254	10	485	19,09	480	18,9
APE-340	G 1 1/2	260	10,24	254	10	485	19,09	480	18,9

Type	C				Weight kg		
	Plastic		Metal				
	mm	in	mm	in	PP	Aluminium	AISI316
APB-340	495	19,49	491	19,33	16	20	32
APE-340	495	19,49	491	19,33	16	20	32

© 2015 sera GmbH
Subject to technical modifications.

Order information

Type	Pump body	Diaphragm	Valve balls	Valve seat	Valve seals	Art.-No. Pump	Art.-No. Spare parts set	×
APB-340	PP	Santo-PTFE	PTFE	PP	PTFE	15004568	90039673	
APB-340	PVDF	Santo-PTFE	PTFE	PVDF	PTFE	15004569	90039674	
APB-340	AISI 316	Santo-PTFE	INOX	INOX	PTFE	15004570	90039675	
APE-340	PP-CFK	Santo-PTFE	PTFE	PP	PTFE	15004591	90039673	
APE-340	PVDF	Santo-PTFE	PTFE	PVDF	PTFE	15004592	90039674	
APE-340	AISI 316	Santo-PTFE	INOX	INOX	PTFE	15004593	90039675	

Options/accessories					APB-340 × Art.-No.		APE-340 × Art.-No.	
Diaphragm-pulsation damper 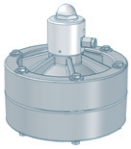	**Type**	**Connection**	**Housing**	**Diaphragm**				
	MPD-340	G 1 1/2	PP [1]	Hytrel+PTFE	37601314		37601314	
			PP-CFK [2]	Hytrel+PTFE	37604859		37604859	
			PVDF-CFK [2]	Santoprene+PTFE	▲		▲	
		[1] II 3G EEx c IIB T4 [2] II 2G EEx c IIB T4	PPS-V [1]	Hytrel+PTFE	▲		▲	
Air supply pressure unit 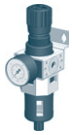	Filter pressure controller, shut-off valve and check valve, fittings and 5 m pneumatic hose incl.				90019999		90019999	
	as above but with solenoid valve incl. double nipple [3]			24 V	90020027		✆	
	[3] design for hazardous areas on request			230 V	90020020		✆	
Connection pieces	**Connections pump**	**Connection piece**		**Connections connection piece**				
	G1 1/2	Hose nozzle PVC-U		d - d1 - G 53 - 50 - G1 1/2	90039945		90039945	
		Transition sleeve nipple PVC - U		d / D - G 50 / 63 - G1 1/2	90039952		90039952	
	■ per pump two pieces are needed							
Stroke transmitting device	mounted on the pump				✆		✆	

● = Basis design – = not available ▲ = with add. price ✆ = on request ❍ = without add. price Art.-No. = available in basic design/ accessories

2

© 2015 **sera GmbH**
Subject to technical modifications.

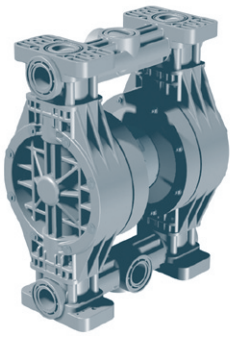

AP series in survey

- Cost-effective
- Leakage-free
- Safe against overpressure
- Low-maintenance continuous duty
- Design according to ATEX
- Safe to run dry
- Dry priming
- High-quality materials
- Robust
- Silicone-free

Infobox

Order information Page 2.143
Options/accessories Page 2.143
Connecting pieces Chapter 4
Resistance chart Chapter 5
Installation examples Chapter 5

Technical data

Type	Max. flow capacity		Admiss. counterpressure		Max. air supply		Control air connection	Max. suction height dry	Max. suction height wet	ATEX95
	l/min	gal/min	bar	psi	bar	psi		m	m	
APB-650	650	171,71	7	101,5	7	101,5	G 1/2	4	7	II 3G EEx c IIB T4
APE-650	650	171,71	7	101,5	7	101,5	G 1/2	4	7	II 2G EEx c IIB T4

2

Dimensional drawing

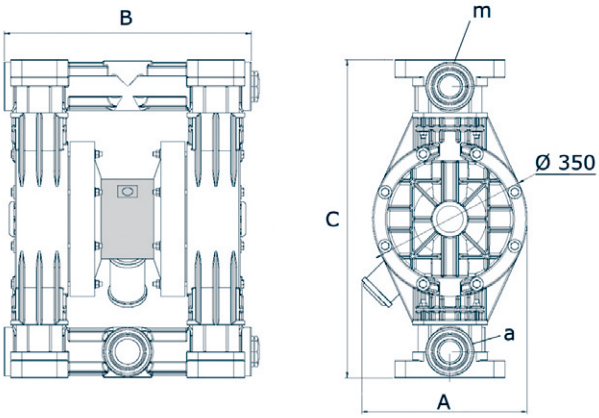

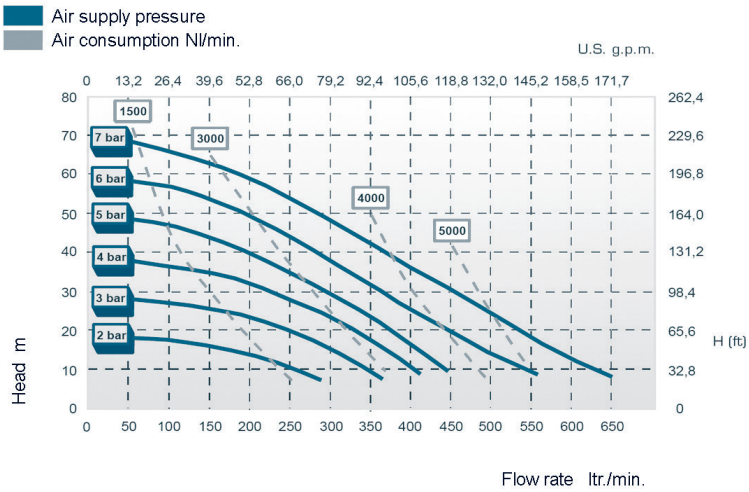

Dimensional chart

Indications in mm / inch

Type	Connections	A		B		C		Weight
	m/a	mm	in	mm	in	mm	in	kg
APB-650	G 2	375	14,76	560	22,05	720	28,35	50
APE-650	G 2	375	14,76	720	28,35	560	22,05	50

© 2015 sera GmbH
Subject to technical modifications.

Order information

Type	Pump body	Diaphragm	Valve balls	Valve seat	Valve seals	Art.-No. Pump	Art.-No. Spare parts set	×
APB-650	PP	Santo-PTFE	PTFE	PP	PTFE	15004571	90039676	
APB-650	PVDF	Santo-PTFE	PTFE	PVDF	PTFE	15004572	90039677	
APB-650	AISI 316	Santo-PTFE	INOX	INOX	PTFE	15004573	90039678	
APE-650	PP-CFK	Santo-PTFE	PTFE	PP	PTFE	15004594	90039676	
APE-650	PVDF	Santo-PTFE	PTFE	PVDF	PTFE	15004595	90039677	
APE-650	AISI 316	Santo-PTFE	INOX	INOX	PTFE	15004596	90039678	

Options/accessories					AP-650 × Art.-No.
Diaphragm-pulsation damper 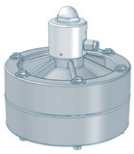	**Type**	**Connection**	**Housing**	**Diaphragm**	
	MPD-650	G 2	PP [1]	Hytrel+PTFE	37601318
			PVDF	Santoprene + PTFE	▲
			Aluminium	Hytrel + PTFE	▲
		[1] II 3G EEx c IIB T4	AISI 316	Hytrel + PTFE	▲
Air supply pressure unit 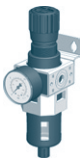	Filter pressure controller, shut-off valve and check valve, fittings and 5 m pneumatic hose incl.				✆
	as above but with solenoid valve incl. double nipple [2]			24 V	✆
	[2] design for hazardous areas on request			230 V	✆
Connection pieces	**Connections pump**	**Connection piece**		**Connections connection piece**	
	G2	Hose nozzle PVC-U		d - d1 - G	90039946
				66 - 60 - G2	
		Transition sleeve nipple PVC - U		d / D - G	90039953
				63 / 75 - G2	
	■ per pump two pieces are needed				

● = Basis design – = not available ▲ = with add. price ✆ = on request ❍ = without add. price Art.-No. = available in basic design/ accessories

2

© 2015 **sera GmbH**
Subject to technical modifications.

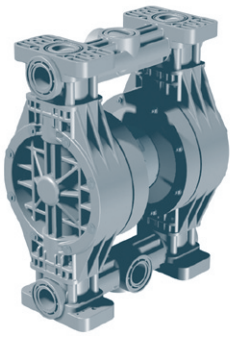

AP series in survey

- Cost-effective
- Leakage-free
- Safe against overpressure
- Low-maintenance continuous duty
- Design according to ATEX
- Safe to run dry
- Dry priming
- High-quality materials
- Robust
- Silicone-free

Infobox

Order information Page 2.145
Options/accessories Page 2.145
Connecting pieces Chapter 4
Resistance chart Chapter 5
Installation examples Chapter 5

Technical data

Type	Max. flow capacity		Admiss. counterpressure		Max. air supply		Control air connection	Max. suction height dry	Max. suction height wet	ATEX95
	l/min	gal/min	bar	psi	bar	psi		m	m	
APB-850	850	224,55	7	101,5	7	101,5	G 1/2	5	7	II 3G EEx c IIB T4
APE-850	850	224,55	7	101,5	7	101,5	G 1/2	5	7	II 2G EEx c IIB T4

2

Dimensional drawing

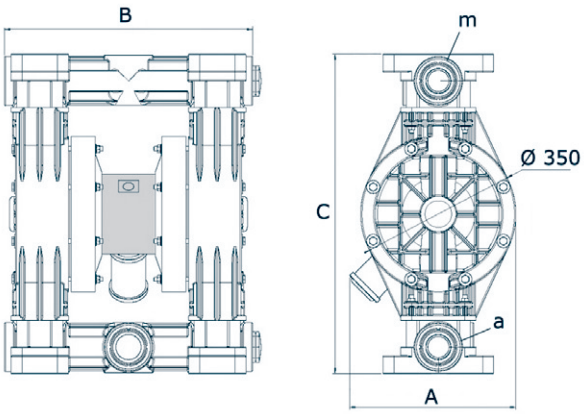

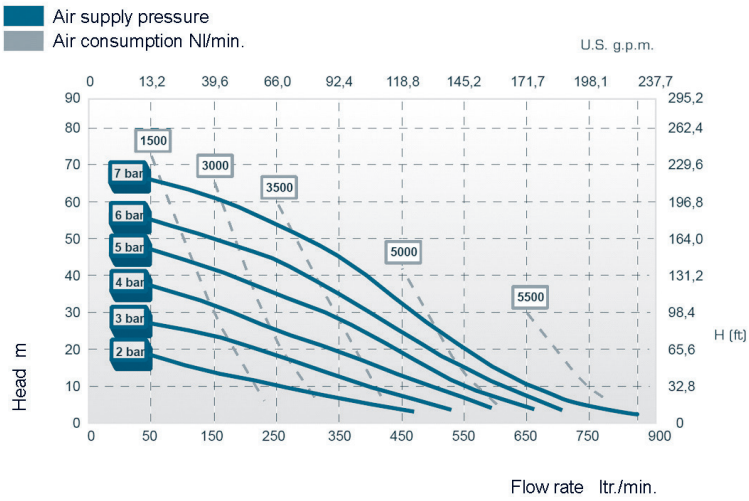

Dimensional chart

Indications in mm / inch

Type	Connections	A		B		C		Weight
	m/a	mm	in	mm	in	mm	in	kg
APB-850	G 3	375	14,76	560	22,05	720	28,35	55
APE-850	G 3	375	14,76	560	22,05	720	28,35	55

© 2015 sera GmbH
Subject to technical modifications.

Order information

Type	Pump body	Diaphragm	Valve balls	Valve seat	Valve seals	Art.-No. Pump	Art.-No. Spare parts set	×
APB-850	PP	Santo-PTFE	PTFE	PP	FPM	15004574	90039680	
APB-850	PP	Santo-PTFE	PTFE	PP	EPDM	15004575	90039681	
APB-850	PVDF	Santo-PTFE	PTFE	PVDF	FPM	15004576	90039682	
APB-850	AISI 316	Santo-PTFE	INOX	INOX	PTFE	15004577	90039684	
APE-850	PP-CFK	Santo-PTFE	PTFE	PP	FPM	15004597	90039680	
APE-850	PP-CFK	Santo-PTFE	PTFE	PVDF	EPDM	15004598	90039681	
APE-850	PVDF	Santo-PTFE	PTFE	PVDF	FPM	15004599	90039682	
APE-850	AISI 316	Santo-PTFE	INOX	INOX	PTFE	15004600	90039684	

Options/accessories

					AP-850 × Art.-No.
Diaphragm-pulsation damper 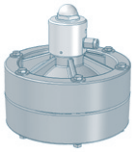	**Type**	**Connection**	**Housing**	**Diaphragm**	
	MPD-850	G 3 [1] II 3G EEx c IIB T4	PP [1]	Hytrel+PTFE	37601805
			PVDF	Santoprene + PTFE	▲
			Aluminium	Hytrel + PTFE	▲
Air supply pressure unit 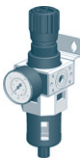	Filter pressure controller, shut-off valve and check valve, fittings and 5 m pneumatic hose incl.				✆
	as above but with solenoid valve incl. double nipple [2] [2] design for hazardous areas on request			24 V	✆
				230 V	✆
Connection pieces	**Connections pump**	**Connection piece**		**Connections connection piece**	
	G3	Hose nozzle PVC-U		d - d1 - G	-
				-	
		Transition sleeve nipple PVC - U		d / D - G	90039954
				90 / 110 - 3	
	■ per pump two pieces are needed				

● = Basis design – = not available ▲ = with add. price ✆ = on request ❍ = without add. price Art.-No. = available in basic design/ accessories

2

© 2015 **sera GmbH**
Subject to technical modifications.

© 2015 **sera GmbH**
Subject to technical modifications.

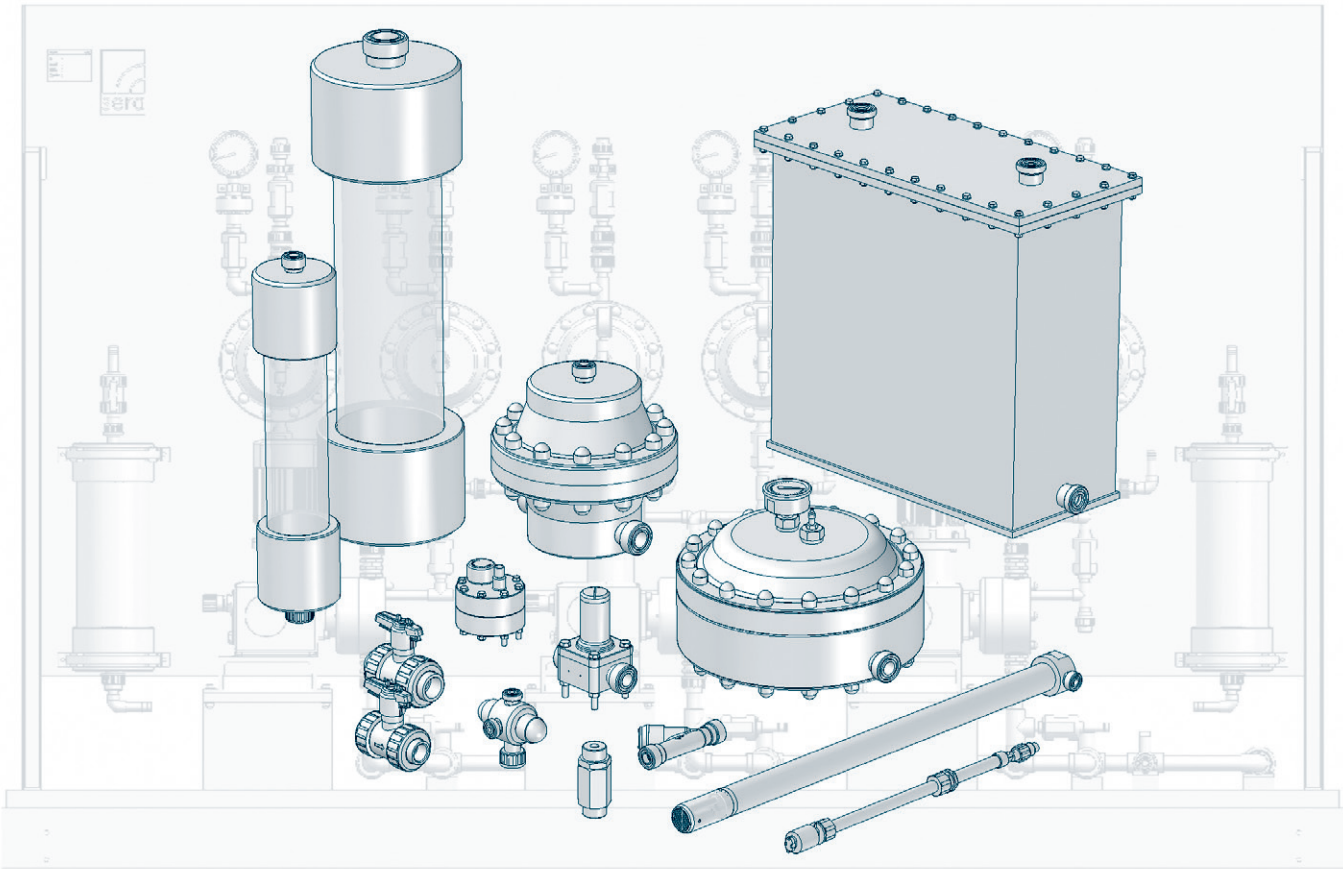

Fittings	Chapter content	Page
Relief- and Pressure keeping valves	Diaphragm-relief valves Diaphragm-pressure-keeping valves Multi function valves	3.3
Pulsation damper	Diaphragm Pulsation damper	3.11
Suction lances	with level switch	3.27
	without level switch	
Check valves / Injection fittings	Dosing valves Injection fittings Vent valve (manual)	3.39
Fittings for the pump suction side	Foot valves Calibration pots Priming aids / Siphon vessels	3.51

© 2015 **sera GmbH**
Subject to technical modifications.

© 2015 **sera GmbH**
Subject to technical modifications.

Relief- and Pressure keeping valves		Type	Pressure range	Page
	Diaphragm relief valves	620.10 ... 627.10	up to 10 bar	3.4
	Diaphragm pressure keeping valves	620.D ... 627.D	up to 10 bar	3.6
	Multi function valves	MFV 05004 ... MFV 05010	up to 10 bar	3.8

© 2015 **sera GmbH**
Subject to technical modifications.

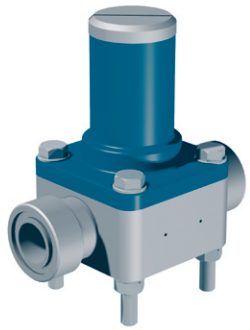

620.10 to 627.10 in survey

- Compact design
- Easy to mount
- Maintenance free
- Reliable
- Overpressure protection of oscillating positive displacement pumps
- High-quality materials

Infobox

Order information Page 3.5
Options/accessories Page 3.5
Resistance chart Chapter 5
Installation examples Chapter 5

Technical data

Type	Nominal width DN	Max. admissible operating pressure bar	Max. admissible operating pressure psi	Set pressure bar	Set pressure psi
620.10	8	10	145	2,5 - 10	36,3 - 145
622.10	15	10	145	2,5 - 10	36,3 - 145
623.10	20	10	145	1,5 - 10	21,8 - 145
624.10	25	10	145	1,5 - 10	21,8 - 145
625.10	32	10	145	1,5 - 10	21,8 - 145
626.10	40	10	145	1,5 - 10	21,8 - 145
627.10	50	10	145	1,5 - 10	21,8 - 145

Dimensional drawing

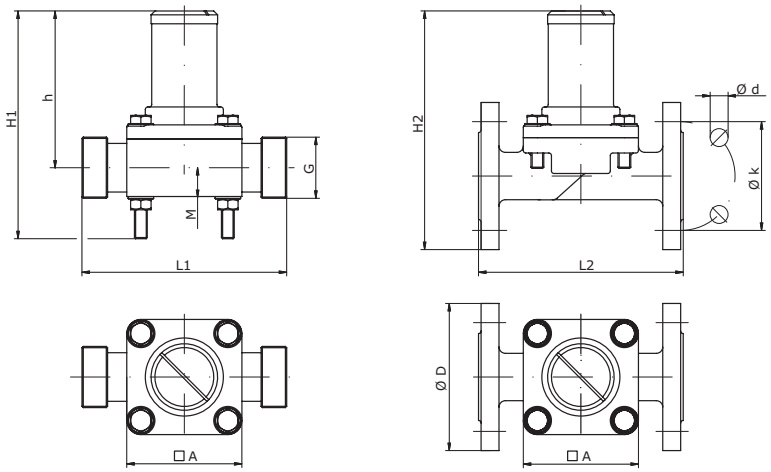

Dimensional chart

Indications in mm / inch

Type	G	d	L1 Plastic mm	L1 Plastic in	L1 1.4581 mm	L1 1.4581 in	L2 mm	L2 in	h Plastic mm	h Plastic in	h 1.4571 mm	h 1.4571 in
620.10	G 3/4	–	80	3,15	110	4,33	–	–	80	3,15	80	3,15
622.10	G 1	–	115	4,53	145	5,71	–	–	90	3,54	88	3,46
623.10	G 1 1/4	14	130	5,12	–	–	150	5,91	116	4,57	–	–
624.10	G 1 1/2	14	160	6,3	–	–	160	6,3	123	4,84	–	–
625.10	G 2	18	180	7,09	–	–	180	7,09	157	6,18	–	–
626.10	G 2 1/4	18	235	9,25	–	–	200	7,87	180	7,09	–	–
627.10	G 2 3/4	18	260	10,24	–	–	230	9,06	185	7,28	–	–

Type	H1 Plastic mm	H1 Plastic in	H1 1.4571 mm	H1 1.4571 in	H2 mm	H2 in	A mm	A in	k mm	k in	M mm	M in
620.10	113	4,45	108	4,25	–	–	50	1,97	–	–	13	0,51
622.10	130	5,12	129	5,08	–	–	72	2,83	–	–	16	0,63
623.10	159	6,26	–	–	177,5	6,99	80	3,15	75	2,95	18	0,71
624.10	166,5	6,56	–	–	187,5	7,38	90	3,54	85	3,35	22,5	0,89
625.10	206	8,11	–	–	235	9,25	100	3,94	100	3,94	24	0,94
626.10	249	9,8	–	–	255	10,04	115	4,53	110	4,33	30	1,18
627.10	254	10	–	–	267,5	10,53	140	5,51	125	4,92	38	1,5

Weights on request

© 2015 sera GmbH
Subject to technical modifications.

Order information

Diaphragm-type relief valve

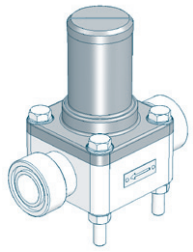

Basic design:
- Diaphragm: PTFE-faced
- Thread connection incl. connection seal: FPM

Type	Thread connection	Material											
		PVC-U		PP		PVDF		1.4581		PP-FRP		PVDF-FRP	
		Article-No.		Article-No.		Article-No.		Article-No.		Article-No.		Article-No.	
620.10	G 3/4	37600007		37600014		37600029		37600605		–		–	
622.10	G 1	37600008		✆		37600030		37600706		37600015		37600036	
623.10	G 1 1/4	37600009		37600016		37600031		–		–		–	
624.10	G 1 1/2	37600010		37600017		37600032		–		–		–	
625.10	G 2	✆		✆		✆		–		–		–	
626.10	G 2 1/4	✆		✆		✆		–		–		–	
627.10	G 2 3/4	✆		✆		✆		–		–		–	

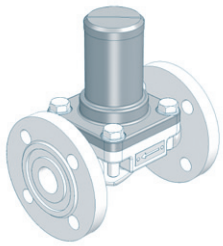

Basic design:
- Diaphragm: PTFE-faced
- Flange connection, connecting dimension acc. to DIN2501

Type	Flange Connection DN	Material			
		1.4581		GG	
		Article-No.		Article-No.	
623.10	20	36230104		37600038	
624.10	25	36240104		37600039	
625.10	32	✆		✆	
626.10	40	✆		✆	
627.10	50	✆		✆	

Options/Accessories		620.10	x	622.10	x	623.10	x	624.10	x	625.10	x	626.10	x	627.10	x
Sealing for connection thread 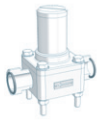	FPM	●		●		●		●		●		●		●	
	EPDM	❍		❍		❍		❍		❍		❍		❍	
	FEP-covered	▲		▲		▲		▲		✆		✆		✆	
Loose flange at plastic fittings 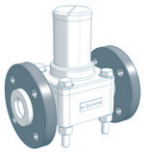	PVC-U-design: loose flange made of PVC-U	✆		▲		▲		▲		✆		✆		✆	
	PP-FRP/PVDF-FRP design	–		✆		–		–		–		–		–	
	PP-design: loose flange made of PP with steel reinforcement	▲		▲		▲		▲		✆		✆		✆	
	PVDF-design: loose flange made of PP with steel reinforcement	▲		▲		▲		▲		✆		✆		✆	

● = Basis design – = not available ▲ = with add. price ✆ = on request ❍ = without add. price Art.-No. = available in basic design/ accessories

3

© 2015 **sera GmbH**
Subject to technical modifications.

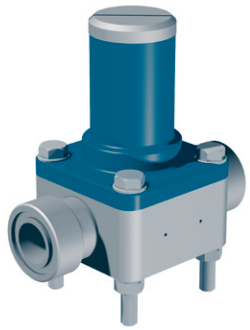

620.D to 627.D in survey

- Compact design
- Easy to mount
- Maintenance free
- Reliable
- Overpressure protection of oscillating positive displacement pumps
- High-quality materials

Infobox

Order information Page 3.7
Options/accessories Page 3.7
Resistance chart Chapter 5
Installation examples Chapter 5

Technical data

Type	Nominal width DN	Max. admissible operating pressure bar	Max. admissible operating pressure psi	Set pressure bar	Set pressure psi
620.D	8	10	145	1,5 - 2	21,8 - 29
622.D	15	10	145	1 - 2	14,5 - 29
623.D	20	10	145	1 - 3,5	14,5 - 50,8
624.D	25	10	145	1 - 3	14,5 - 43,5
625.D	32	10	145	1 - 7	14,5 - 101,5
626.D	40	10	145	1 - 7	14,5 - 101,5
627.D	50	10	145	1 - 7	14,5 - 101,5

Dimensional drawing

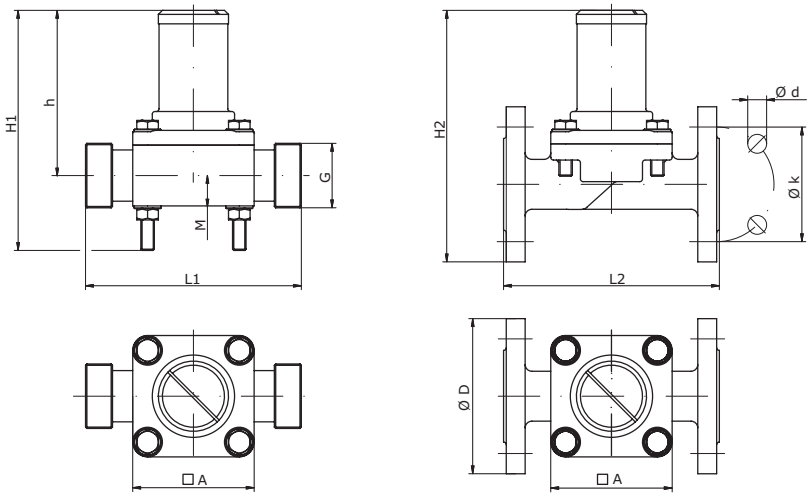

Dimensional chart
Indications in mm / inch

Type	G	d	L1 Plastic mm	L1 Plastic in	L1 1.4581 mm	L1 1.4581 in	L2 mm	L2 in	h Plastic mm	h Plastic in	h 1.4571 mm	h 1.4571 in
620.D	G 3/4	–	80	3,15	110	4,33	–	–	80	3,15	80	3,15
622.D	G 1	–	115	4,53	145	5,71	–	–	90	3,54	88	3,46
623.D	G 1 1/4	14	130	5,12	–	–	150	5,91	116	4,57	–	–
624.D	G 1 1/2	14	160	6,3	–	–	160	6,3	123	4,84	–	–
625.D	G 2	18	180	7,09	–	–	180	7,09	157	6,18	–	–
626.D	G 2 1/4	18	235	9,25	–	–	200	7,87	180	7,09	–	–
627.D	G 2 3/4	18	260	10,24	–	–	230	9,06	185	7,28	–	–

Type	H1 Plastic mm	H1 Plastic in	H1 1.4571 mm	H1 1.4571 in	H2 mm	H2 in	A mm	A in	k mm	k in	M mm	M in
620.D	113	4,45	108	4,25	–	–	50	1,97	–	–	13	0,51
622.D	130	5,12	129	5,08	–	–	72	2,83	–	–	16	0,63
623.D	159	6,26	–	–	177,5	6,99	80	3,15	75	2,95	18	0,71
624.D	166,5	6,56	–	–	187,5	7,38	90	3,54	85	3,35	22,5	0,89
625.D	206	8,11	–	–	235	9,25	100	3,94	100	3,94	24	0,94
626.D	249	9,8	–	–	255	10,04	115	4,53	110	4,33	30	1,18
627.D	254	10	–	–	267,5	10,53	140	5,51	125	4,92	38	1,5

Weights on request

© 2015 sera GmbH
Subject to technical modifications.

Order information

Diaphragm-type pressure-keeping valve

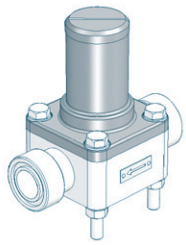

Basic design:
- Diaphragm: PTFE-faced
- Thread connection incl. connection seal: FPM

Type	Thread connection	Material											
		PVC-U		PP		PVDF		1.4581		PP-FRP		PVDF-FRP	
		Article-No.		Article-No.		Article-No.		Article-No.		Article-No.		Article-No.	
620.D	G 3/4	37600048		37600055		37600070		37600601		–		–	
622.D	G 1	37600049		✆		37600071		37600533		37600056		37600077	
623.D	G 1 1/4	37600050		37600057		37600072		–		–		–	
624.D	G 1 1/2	37600051		37600058		37600073		–		–		–	
625.D	G 2	✆		✆		✆		–		–		–	
626.D	G 2 1/4	✆		✆		✆		–		–		–	
627.D	G 2 3/4	✆		✆		✆		–		–		–	

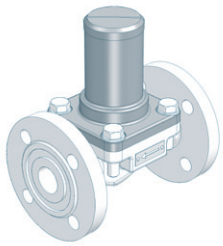

Basic design:
- Diaphragm: PTFE-faced
- Flange connection, connecting dimension acc. to DIN2501

Type	Flange Connection DN	Material			
		1.4581		GG	
		Article-No.		Article-No.	
623.D	20	36231104		37600080	
624.D	25	36241104		37600081	
625.D	32	✆		✆	
626.D	40	✆		✆	
627.D	50	✆		✆	

Options/Accessories		620.D	×	622.D	×	623.D	×	624.D	×	625.D	×	626.D	×	627.D	×
Sealing for connection thread 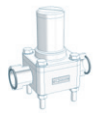	FPM	●		●		●		●		●		●		●	
	EPDM	❍		❍		❍		❍		❍		❍		❍	
	FEP-covered	▲		▲		▲		▲		✆		✆		✆	
Loose flange at plastic fittings 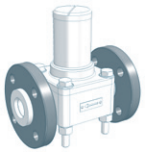	PVC-U-design: loose flange made of PVC-U	✆		▲		▲		▲		✆		✆		✆	
	PP-FRP/PVDF-FRP design	–		✆		–		–		–		–		–	
	PP-design: loose flange made of PP with steel reinforcement	▲		▲		▲		▲		✆		✆		✆	
	PVDF-design: loose flange made of PP with steel reinforcement	▲		▲		▲		▲		✆		✆		✆	

● = Basis design – = not available ▲ = with add. price ✆ = on request ❍ = without add. price Art.-No. = available in basic design/ accessories

3

© 2015 **sera GmbH**
Subject to technical modifications.

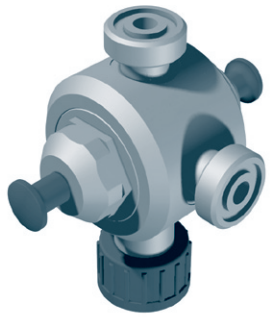

MFV 05004 to MFV 05010 in survey

- Compact design
- Easy to mount
- Maintenance free
- Overpressure protection for dosing pumps
- Venting
- High-quality materials

Infobox

Order information Page 3.9
Options/accessories Page 3.9
Resistance chart Chapter 5
Installation examples Chapter 5

Technical data

Type	Opening pressure		Holding pressure	
	bar	psi	bar	psi
MFV 05004	4	58	1 - 1,5	14,5 - 21,8
MFV 05006	6	87	1 - 1,5	14,5 - 21,8
MFV 05010	10	145	1 - 1,5	14,5 - 21,8

Dimensional drawing

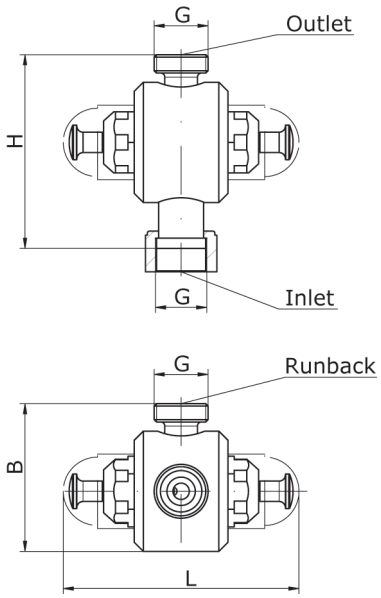

Dimensional chart

Indications in mm / inch

Type	G	L		H		B		Weight kg		
		mm	in	mm	in	mm	in	PVC-U	PP	PVDF
MFV 05004	G 3/4	130	5,12	95	3,74	72	2,83	0,25	0,2	0,25
MFV 05006	G 3/4	130	5,12	95	3,74	72	2,83	0,25	0,2	0,25
MFV 05010	G 3/4	130	5,12	95	3,74	72	2,83	0,25	0,2	0,25

Indication of weight for basic design acc. to order information

© 2015 sera GmbH
Subject to technical modifications.

Order information

Multi-function valve

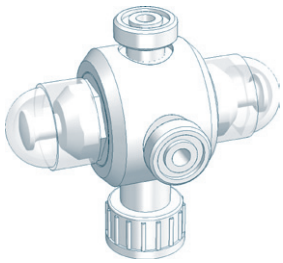

Basic design:
- Diaphragm: PTFE-faced
- Thread connection incl. connection seal: FPM

Type	Thread connection	Material					
		PVC-U		PP		PVDF	
		Article-No.		Article-No.		Article-No.	
MFV 05004	G 3/4	37600968		37600977		✆	
MFV 05006	G 3/4	37600971		37600980		✆	
MFV 05010	G 3/4	37600974		37600983		✆	

Options/Accessories		MFV 05004 up to MFV 05010	×
Sealing for connection thread	FPM	●	
	EPDM	❍	
	FEP-covered	▲	

● = Basis design – = not available ▲ = with add. price ✆ = on request ❍ = without add. price Art.-No. = available in basic design/ accessories

3

© 2015 **sera GmbH**
Subject to technical modifications.

© 2015 **sera GmbH**
Subject to technical modifications.

Diaphragm Pulsation damper Type		Pressure range	for pumps with capacity up to	Page
	713.1 ... 715.1	up to 10 bar	4000 l/h	3.12
	713.1 ... 715.1	up to 16 bar	4000 l/h	3.14
	720.1 ... 723.1	up to 10 bar	600 l/h	3.16
	721.1 ... 724.1	up to 50 bar	900 l/h	3.20
	810.1	up to 180 bar	900 l/h	3.22

© 2015 **sera GmbH**
Subject to technical modifications.

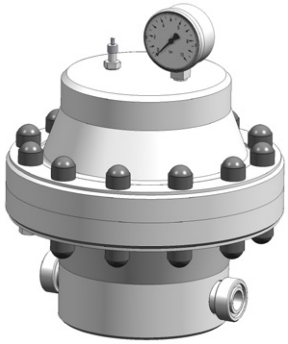

713.1/715.1 in survey

- Easy to operate
- Low maintenance
- Long service life
- Easy to install
- Design acc. to 97/23/EG
- High-quality materials

Infobox

Order information Page 3.13
Options/accessories Page 3.13
Resistance chart Chapter 5
Installation examples Chapter 5

Technical data

Type	Nominal width DN	Max. admissible operating pressure		Content	
		bar	psi	Litres	Gallons
713.1	15	10	145	3	0,79
713.1	20	10	145	3	0,79
713.1	25	10	145	3	0,79
715.1	25	10	145	5	1,32
715.1	32	10	145	5	1,32
715.1	40	10	145	5	1,32

Dimensional drawing

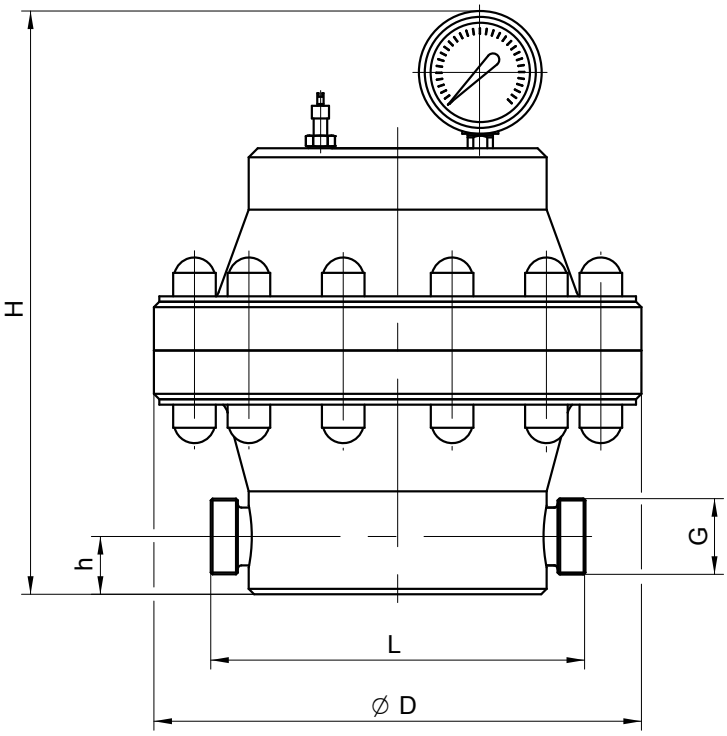

Dimensional chart

Indications in mm / inch

Type	G	D		L						h		H1		H2		Weight (kg)	
				PVC-U		PP		PVDF								PP	PVC-U/ PVDF
		mm	in	mm	in	mm	in	mm	in	mm	in	mm	in	mm	in		
713.1	G1	270	10,63	213	8,39	263	10,35	255	10,04	32	1,26	271	10,67	360	14,17	6,5	9
713.1	G1 1/4	270	10,63	207	8,15	215	8,46	215	8,46	32	1,26	271	10,67	360	14,17	6,5	9
713.1	G1 1/2	270	10,63	235	9,25	243	9,57	243	9,57	32	1,26	271	10,67	360	14,17	6,5	9
715.1	G1 1/2	300	11,81	270	10,63	339	13,35	339	13,35	42	1,65	320	12,60	410	16,14	9	14,5
715.1	G 2	300	11,81	265	10,43	280	11,02	280	11,02	42	1,65	320	12,60	410	16,14	9	14,5
715.1	G2 1/4	300	11,81	280	11,02	280	11,02	280	11,02	42	1,65	320	12,60	410	16,14	9	14,5

- Indication of weight for basic design acc. to order information

© 2015 sera GmbH
Subject to technical modifications.

Order information

Diaphragm-pulsation damper

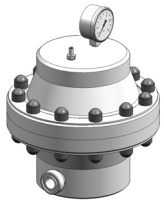

Basic design:
- Filling valve, diaphragm made of EPDM or FPM, Connection seals o-ring EPDM or FPM
- Manometer glycerine damped, d 63, 0-16 bar, housing, 1.4301, measuring system copper-alloy based,
- PVDF-design: upper part (not medium-contacting) made of PVC-U
- Connections: external thread

Type	Thread connection	Material											
		PVC-U/EPDM		PVC-U/FPM		PP/EPDM		PP/FPM		PVDF/EPDM		PVDF/FPM	
		Article-No.		Article-No.		Article-No.		Article-No.		Article-No.		Article-No.	
713.1	G 1	30071034		30071035		30071036		30071037		30071058		30071059	
713.1	G 1 1/4	30071038		30071039		30071040		30071041		30071060		30071061	
713.1	G 1 1/2	30071042		30071043		30071044		30071045		30071062		30071063	
715.1	G 1 1/2	30071046		30071047		30071048		30071049		30071064		30071065	
715.1	G 2	30071050		30071051		30071052		30071053		30071066		30071067	
715.1	G 2 1/4	30071054		30071055		30071056		30071057		30071068		30071069	

Options/Accessories

			713.1		715.1	
Loose flange at plastic fittings	Design: Connection incl. connection o-ring Connecting dimension acc. to DIN 2501					
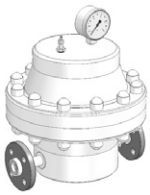	PVC-design: loose flange made of PVC-U	DN 15	▲		–	
		DN 20	▲		–	
		DN 25	▲		▲	
		DN 32	–		▲	
		DN 40	–		▲	
	PP-design: loose flange made of PP with steel reinforcement	DN 15	▲		–	
		DN 20	▲		–	
		DN 25	▲		▲	
		DN 32	–		▲	
		DN 40	–		▲	
	PVDF-design: loose flange made of PP with steel reinforcement	DN 15	▲		–	
		DN 20	▲		–	
		DN 25	▲		▲	
		DN 32	–		▲	
		DN 40	–		▲	
Filling pump FLP 2	for filling device, max. 7 bar (101 psi), with manometer, 2 m (6,5 ft) hose, coupling piece for air hose		90009396		90009396	
Console	for wall mounting made of:	PP	90010913		90010913	
		1.4301	90010914		90010914	
		painted steel	90010915		90010915	

● = Basis design – = not available ▲ = with add. price ✆ = on request ❍ = without add. price Art.-No. = available in basic design/ accessories

© 2015 **sera GmbH**
Subject to technical modifications.

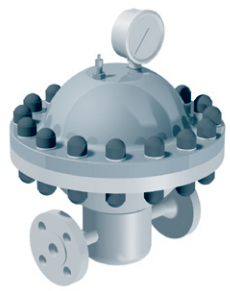

713.1/715.1 in survey

- Easy to operate
- Low maintenance
- Long service life
- Easy to install
- Design acc. to 97/23/EG
- High-quality materials

Infobox

Order information Page 3.15
Options/accessories Page 3.15
Resistance chart Chapter 5
Installation examples Chapter 5

Technical data

Type	Nominal width DN	Max. admissible operating pressure bar	Max. admissible operating pressure psi	Content Litres	Content Gallons
713.1	15	16	232	3	0,79
713.1	20	16	232	3	0,79
713.1	25	16	232	3	0,79
715.1	25	16	232	5	1,32
715.1	32	16	232	5	1,32
715.1	40	16	232	5	1,32

Dimensional drawing

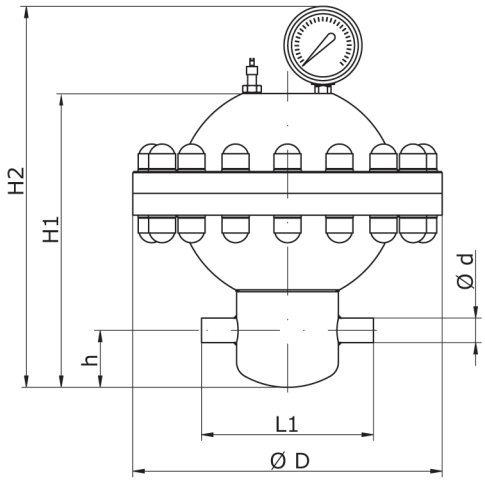

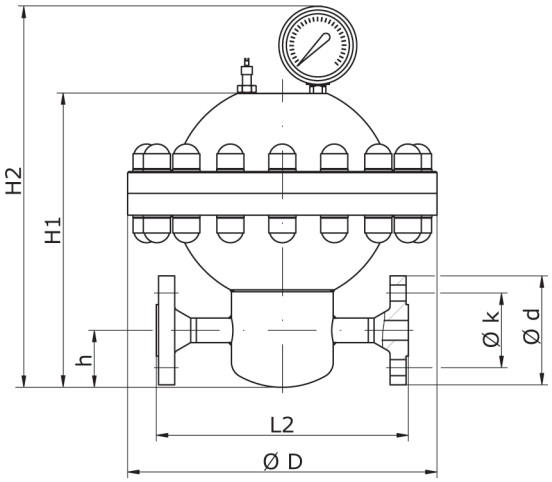

Flange connections acc. to DIN 2633

Dimensional chart

Indications in mm / inch

Type	d welded joint	d flange mm	D mm	D in	L1 mm	L1 in	L2 mm	L2 in	h mm	h in	H1 mm	H1 in	H2 mm	H2 in	K mm	K in
713.1	21.3	95	270	10,63	150	5,91	220	8,66	50	1,97	256	10,08	332	13,07	65	2,56
713.1	26.9	105	270	10,63	144	5,67	220	8,66	50	1,97	256	10,08	332	13,07	75	2,95
713.1	33.7	115	270	10,63	144	5,67	220	8,66	50	1,97	256	10,08	332	13,07	85	3,35
715.1	33.7	115	300	11,81	184	7,24	260	10,24	60	2,36	297	11,69	373	14,69	85	3,35
715.1	42.4	140	300	11,81	180	7,09	260	10,24	60	2,36	297	11,69	373	14,69	100	3,94
715.1	48.3	150	300	11,81	176	6,93	260	10,24	60	2,36	297	11,69	373	14,69	110	4,33

- Weights on request

© 2015 sera GmbH
Subject to technical modifications.

Order information

Diaphragm-pulsation damper

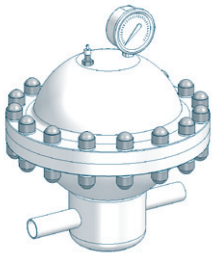

Basic design:
- Filling valve, diaphragm made of EPDM or FPM, upper part (not medium-contacting) 1.4305,
- Manometer glycerine-damped, d63,0-25 bar, housing 1.4301, measuring system copper-alloy,
- Connection: welded joint

Type	Connection welded joint d	Material 1.4571/EPDM Article-No.		Material 1.4571/FPM Article-No.	
713.1	21,3	30071070		30071071	
713.1	26,9	30071072		30071073	
713.1	33,7	30071074		30071075	
715.1	33,7	30071076		30071077	
715.1	42,4	30071078		30071079	
715.1	48,3	30071080		30071081	

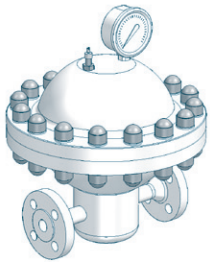

Basic design:
- Filling valve, diaphragm made of EPDM or FPM, upper part (not medium-contacting) 1.4305,
- Manometer glycerine-damped, d63, 0-25 bar, housing 1.4301, measuring system copper-alloy,
- Connection: flange acc. to DIN 2633

Type	Flange Connection DN	Material 1.4571/EPDM Article-No.		Material 1.4571/FPM Article-No.	
713.1	15	30071082		30071083	
713.1	20	30071084		30071085	
713.1	25	30071086		30071087	
715.1	25	30071088		30071089	
715.1	32	30071090		30071091	
715.1	40	30071092		30071093	

Options/Accessories			713.1 715.1	×
Filling pump FLP 2	for filling device, max. 7 bar (101 psi), with manometer, 2 m (6,5 ft) hose, coupling piece for air hose		90009396	
Console	for wall mounting made of:	1.4301	90010914	
		painted steel	90010915	

● = Basis design – = not available ▲ = with add. price ✆ = on request ❍ = without add. price Art.-No. = available in basic design/ accessories

3

© 2015 **sera GmbH**
Subject to technical modifications.

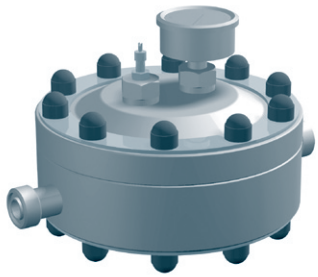

720.1 up to 723.1 in survey

- Easy to operate
- Low maintenance
- Long service life
- Flexible installation
- Easy to install
- Design acc. to 97/23/EG
- High-quality materials

Infobox

Order information Page 3.17
Options/accessories Page 3.17
Resistance chart Chapter 5
Installation examples Chapter 5

Technical data

Type	Nominal width DN	Max. admissible operating pressure		Content	
		bar	psi	Litres	Gallons
720.1	5	10	145	0,025	0,0066
721.2	10	10	145	0,14	0,037
722.1	15	10	145	0,32	0,085
723.1	20	10	145	0,86	0,227

Dimensional drawing

720.1

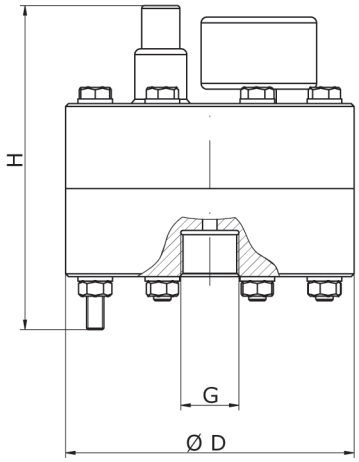

721.2 - 723.1

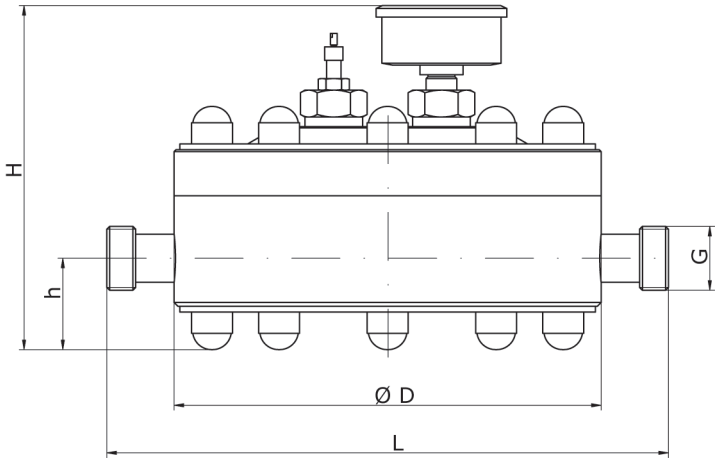

Dimensional chart

Indications in mm / inch

Type	G	D		L		h		H		Weight (kg)		
		mm	in	mm	in	mm	in	mm	in	PVC-U	PP	PVDF
720.1	G 1/2	100	3,94	–	–	–	–	115	4,53	0,9	0,9	1
721.2	G 3/4	180	7,09	250	9,84	45	1,77	165	6,50	4,5	3,5	5
722.1	G 1	222	8,74	292	11,50	48	1,89	180	7,09	6,5	5,0	7
723.1	G 1 1/4	280	11,02	330	12,99	46	1,81	211	8,31	11,5	8,0	13

- Indication of weight for basic design acc. to order information

© 2015 sera GmbH
Subject to technical modifications.

Order information

Diaphragm-pulsation damper

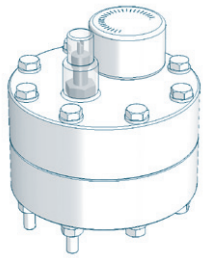

Basic design:
- Manometer d 40, 0-16 bar, plastic housing, measuring system copper alloy, filling valve,
- PVDF-design: upper part (not medium-contacting) made of PVC-U
- Diaphragm: PTFE

Type	Thread connection	Material PVC-U Article-No.		Material PP Article-No.		Material PVDF Article-No.	
720.1	G 1/2	37601848		37601856		✆	

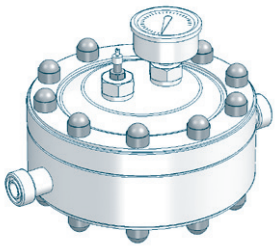

Basic design:
- Manometer d 63, 0-16 bar, sheet steel housing, measuring system copper-alloy, filling valve,
- PVDF-design: upper part (not medium-contacting) made of PVC-U
- Diaphragm: PTFE-faced, seals: FPM

Type	Thread connection	Material PVC-U Article-No.		Material PP Article-No.		Material PVDF Article-No.	
721.2	G 3/4	37602013		37602017		37602020	
722.1	G 1	30100008		30100009		30100010	
723.1	G 1 1/4	30100011		30100012		30100013	

3

Options/Accessories		720.1	×	721.2 722.1	×	723.1	×
Diaphragm 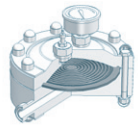	PTFE	●		–		–	
	PTFE-faced	–		●		●	
	FPM	✆		✆		✆	
Sealings	FPM	–		●		●	
	EPDM	–		❍		❍	
	FEP-covered	–		▲		▲	
Filling pump FLP 2	for filling device, max. 7 bar (101 psi), with manometer, 2 m (6,5 ft) hose, coupling piece for air hose	90009396		90009396		90009396	
Connection adapter 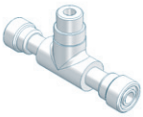	Thread connection: G 3/4 Connection pulsation damper: G 1/2 external	Material Adapter / Sealing:					
	PVC-U/FPM	90021733		–		–	
	PVC-U/EPDM	90025079		–		–	
	PP/FPM	90038083		–		–	
	PP/EPDM	90038082		–		–	
	PVDF/ FEP-covered	✆		–		–	

● = Basis design – = not available ▲ = with add. price ✆ = on request ❍ = without add. price Art.-No. = available in basic design/ accessories

© 2015 **sera GmbH**
Subject to technical modifications.

Options/Accessories			720.1	x	721.2 722.1	x	723.1	x
Console for wall mounting 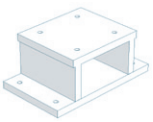	PP		–		–		90011722	
Fixing clamp 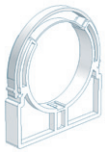	2 pieces per pulsation damper	PP d16	90010649		–		–	
		PP d25	–		90010651		–	

● = Basis design – = not available ▲ = with add. price ✆ = on request ❍ = without add. price Art.-No. = available in basic design/ accessories

3

© 2015 **sera GmbH**
Subject to technical modifications.

© 2015 **sera GmbH**
Subject to technical modifications.

721.1 up to 724.1 in survey

- Easy to operate
- Low maintenance
- Long service life
- Easy to install
- Design acc. to 97/23/EG
- High-quality materials

Infobox

Order information Page 3.21
Options/accessories Page 3.21
Resistance chart Chapter 5
Installation examples Chapter 5

Technical data

Type	Max. admissible operating pressure		Content	
	bar	psi	Litres	Gallons
721.1	50	725	0,14	0,037
722.1	50	725	0,32	0,085
723.1	50	725	0,86	0,227

Dimensional drawing

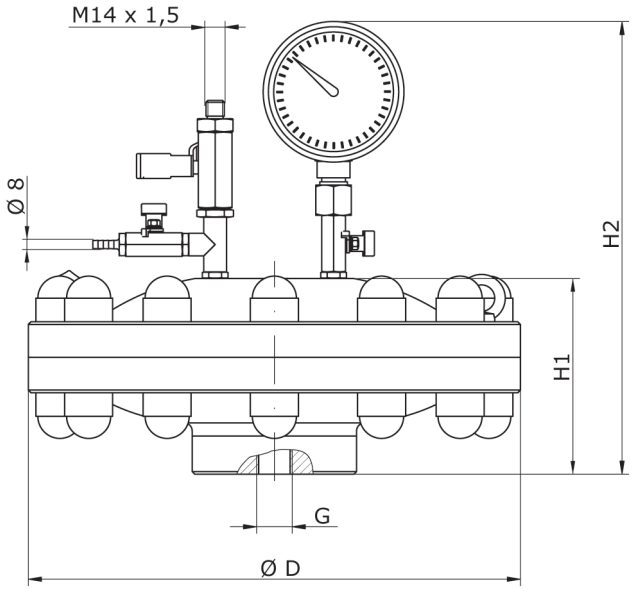

Connection medium side

Dimensional chart

Indications in mm / inch

Type	G	D		H1		H2		Weight
		mm	in	mm	in	mm	in	kg
721.1	G 3/4	195	7,68	80	3,15	280	11,02	13
722.1	G 3/4	228	8,98	95	3,74	295	11,61	16
723.1	G 3/4	297	11,69	125	4,92	325	12,80	33

- Indication of weight for basic design acc. to order information

© 2015 sera GmbH
Subject to technical modifications.

Order information

Diaphragm-pulsation damper

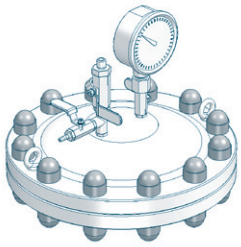

Basic design:
- Upper part (not medium-contacting) 1.4305, seal FEP-covered, diaphragm PTFE
- filling and pressure measuring device
- manometer glycerine-damped, d63, 0-100 bar, housing 1.4301, measuring system 1.4571

Type	Thread connection	Material 1.4571/PTFE Article-No.	
721.1	**G 3/4**	30100001	
722.1	**G 3/4**	30100002	
723.1	**G 3/4**	30100003	

Options/Accessories				721.1 up to 723.1	×
Transition piece with welded end	Design: Seals O-ring FEP-covered				
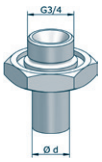	1.4571	**d x s**			
		21,3 x 2,15		90028059	
		26,9 x 2,45		90028060	
		33,7 x 2,85		90028061	
Transition piece with external thread	Design: Seals O-ring FEP-covered				
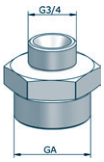	1.4571	**GA**			
		G 3/4		90028062	
		G 1 1/4		90028063	
Filling pump FLP 2	for filling device, max. 7 bar (101 psi), with manometer, 2 m (6,5 ft) hose, coupling piece for air hose			90009396	
Filling joint (for FLP 2)	1.4571	**Inlet** M14x1,5	**Outlet** M8x1	90022488	
Console 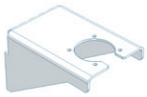	for wall mounting made of:	1.4301		90011238	

● = Basis design – = not available ▲ = with add. price ✆ = on request ❍ = without add. price Art.-No. = available in basic design/ accessories

3

© 2015 **sera GmbH**
Subject to technical modifications.

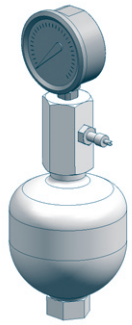

810.1-0,16/10 - 810.1-2,0/10 in survey

- Compact design
- Easy to operate
- Low maintenance
- Long service life
- Easy to install
- Design acc. to 97/23/EG
- High-quality materials

Infobox

Order information Page 3.23
Options/accessories Page 3.23
Resistance chart Chapter 5
Installation examples Chapter 5

Technical data

Type	Max. admissible operating pressure		Content	
	bar	psi	Litres	Gallons
810.1-0,16/10	10	145	0,16	0,042
810.1-0,32/10	10	145	0,32	0,085
810.1-0,75/10	10	145	0,75	0,198
810.1-2,0/10	10	145	2,00	0,528

Dimensional drawing

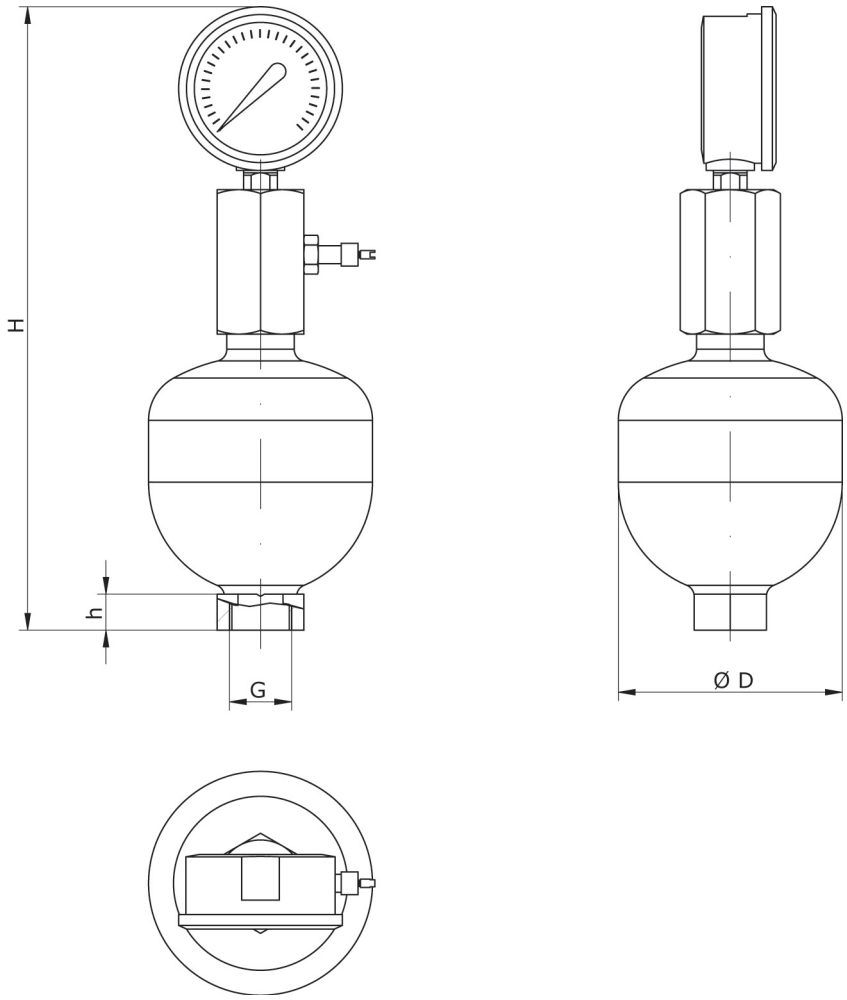

Dimensional chart

Indications in mm / inch

Type	G	D		h		H		Weight (kg)
		mm	in	mm	in	mm	in	
810.1-0,16/10	G 1/2	74	2,91	14	0,55	245	9,65	0,8
810.1-0,32/10	G 1/2	93	3,66	14	0,55	260	10,24	1,3
810.1-0,75/10	G 1/2	212	8,35	14	0,55	290	11,24	2,8
810.1-2,0/10	G 3/4	160	6,30	18	0,71	340	13,39	4,0

- Indication of weight for basic design acc. to order information

© 2015 sera GmbH
Subject to technical modifications.

Order information

Diaphragm-pulsation damper

Basic design:
- with filling and measuring device up to 10 bar (145 psi), plastic design
- Manometer d63, 0-16 bar (232 psi), measuring system copper-alloy

Type	Thread connection	Material			
		1.4571/Butyl		1.4571/FPM	
		Article-No.		Article-No.	
810.1-0,16/10	G 1/2	37603720		37603724	
810.1-0,32/10	G 1/2	37603721		37603725	
810.1-0,75/10	G 1/2	37603722		37603726	
810.1-2,0/10	G 3/4	37603723		37603727	

Options/Accessories			810.1-0,16/10 up to 810.1-2,0/10	×
Filling pump FLP 2	for filling device, max. 7 bar (101 psi), with manometer, 2 m (6,5 ft) hose, coupling piece for air hose		90009396	
Filling and pressure measuring devices	mounted on pulsation damper:			
	Plastic design	Manometer 0-16 bar (232 psi), measuring system copper alloy	●	
	Stainless steel design	Manometer 0-16 bar (232 psi), glycerine damped, housing 1.4301, measuring system copper alloy	▲	

● = Basis design – = not available ▲ = with add. price ✆ = on request ❍ = without add. price Art.-No. = available in basic design/ accessories

3

© 2015 **sera GmbH**
Subject to technical modifications.

810.1-0,16/180 to 810.1-2,0/100 in survey

- Compact design
- Easy to operate
- Low maintenance
- Long service life
- Easy to install
- Design acc. to 97/23/EG
- High-quality materials

Infobox

Order information Page 3.25
Options/accessories Page 3.25
Resistance chart Chapter 5
Installation examples Chapter 5

Technical data

Type	Max. admissible operating pressure		Content	
	bar	psi	Litres	Gallons
810.1-0,16/180	180	2610	0,16	0,042
810.1-0,32/160	160	2320	0,32	0,085
810.1-0,75/140	140	2030	0,75	0,198
810.1-2,0/100	100	1450	2	0,528

Dimensional drawing

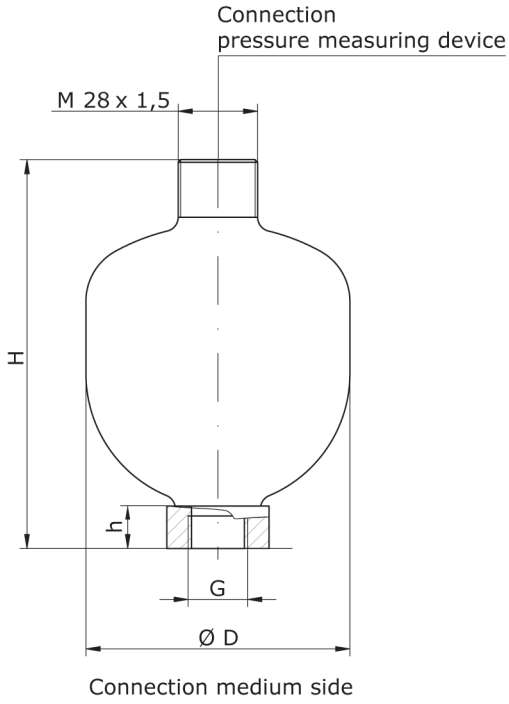

Dimensional chart

Indications in mm / inch

Type	G	D		h		H		Weight
		mm	in	mm	in	mm	in	kg
810.1-0,16/180	G 1/2	74	2,91	14	0,55	124	4,88	0,8
810.1-0,32/160	G 1/2	93	3,66	14	0,55	137	5,39	1,3
810.1-0,75/140	G 1/2	212	8,35	14	0,55	168	6,61	2,8
810.1-2,0/100	G 3/4	160	6,30	18	0,71	218	8,58	4

- Indication of weight for basic design acc. to order information

© 2015 sera GmbH
Subject to technical modifications.

Order information

Diaphragm-pulsation damper

Basic design

- Connection: internal thread

Type	Thread connection	Material			
		1.4571/Butyl		1.4571/FPM	
		Article-No.		Article-No.	
810.1-0,16/180	**G 1/2**	90008811		90009498	
810.1-0,32/160	**G 1/2**	90010409		90010983	
810.1-0,75/140	**G 1/2**	37600313		37600148	
810.1-2,0/100	**G 1/2**	37600314		37600149	

Options/Accessories		810.1-0,16/180 up to 810.1-2,0/100 ×
Filling and pressure measuring devices	Design: removable manometer d63, plastic housing, measuring system copper-alloy, 2,5 m (8,2 ft) filling hose, connection M14x1,5	
	0 bar - 25 bar (362,5 psi)	37601674
	0 bar - 100 bar (1450 psi)	37601673
	0 bar - 250 bar (3625 psi)	30066005

● = Basis design – = not available ▲ = with add. price ✆ = on request ❍ = without add. price Art.-No. = available in basic design/ accessories

3

© 2015 **sera GmbH**
Subject to technical modifications.

© 2015 **sera GmbH**
Subject to technical modifications.

Suction lances with level switch		max. flow rate	Page
	SL-11.1 / SL-12.1	up to 35 l/h	3.28
	SL-02	up to 200 l/h	3.30
	SLP-151.1 / SLP-152.1	up to 700 l/h	3.32

Suction lances without level switch		max. flow rate	Page
	S-01 (plastic)	up to 1500 l/h	3.34
	S-01 (stainless steel)	up to 1500 l/h	3.36

© 2015 **sera GmbH**
Subject to technical modifications.

SL-11.1 / SL-12.1 in survey

- Compact design
- Safe
- Height-adjustable
- 1- or 2-stage level monitoring
- Flexible connection possibilities
- Maintenance-free
- Easy to operate
- High-quality materials

Infobox

Order information Page 3.29
Options/accessories Page 3.29
Resistance chart Chapter 5
Installation examples Chapter 5

Technical data

Type	Switching voltage	Switching current	Switching capacity		Max. flow rate		Max. viscosity of the medium	Min. density of the medium
	V / AC/DC	A	W	VA	l/h	gal/h	mPas	kg/dm³
SL-11.1	50	0.5	10	10	35*	9,25*	50	1
SL-12.1	50	0.5	10	10	35*	9,25*	50	1

- Max. Flowrate: up to 14 l/h with hose screwing 4/6
  up to 35 l/h with hose screwing 6/12

Dimensional drawing

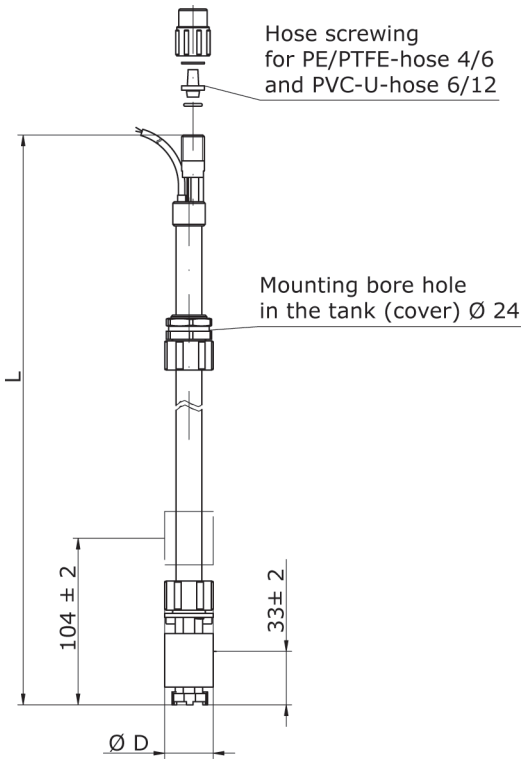

Dimensional chart

Indications in mm / inch

Type	D		L	
	mm	in	mm	in
SL-11.1	30	1,18	600	23,62
SL-11.1	30	1,18	1000	39,37
SL-11.1	30	1,18	1200	47,24
SL-12.1	30	1,18	600	23,62
SL-12.1	30	1,18	1000	39,37
SL-12.1	30	1,18	1200	27,24

© 2015 sera GmbH
Subject to technical modifications.

Order information

Suction lance

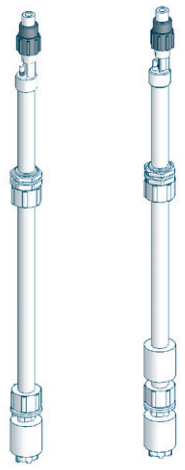

Basic design:
- Materials:
- PVC-U or PP
- Foot valve: PVC-U or PP
- Seals: FPM and EPDM (both materials are used)
- Valve ball: PTFE
- Internal hose: PE
- Level switch: PP
- Level switch one or two-stage, closing when floating down
- Length of cable: min. 2 m (6,6 ft)
- Free cable ends
- Connection parts: hose screwing for PTFE/PE-hose 4/6 and PVC-U-hose 6/12

Type	L		level switch	Material			
	mm	in		PVC-U/FPM-EPDM		PP/FPM-EPDM	
				Article-No.		Article-No.	
SL-11.1	600	23,62	1-stage	37602767		37603024	
SL-11.1	1.000	39,37	1-stage	37603023		37603025	
SL-11.1	1.200	47,24	1-stage	37602882		37603085	
SL-12.1	600	23,62	2-stage	37603026		37603028	
SL-12.1	1.000	39,37	2-stage	37603027		37603029	
SL-12.1	1.200	47,24	2-stage	37603083		37603086	

Options/Accessories		SL-11.1 SL-12.1	×
Switch function 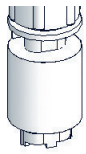	closing when floating down	●	
	opening when floating down	❍	
Connection cable	2 m with plug M 12	▲	

● = Basis design – = not available ▲ = with add. price ✆ = on request ❍ = without add. price Art.-No. = available in basic design/ accessories

3

© 2015 **sera GmbH**
Subject to technical modifications.

SL-02 in survey

- Compact and robust design
- Easy to operate
- Maintenance free
- Safe
- High-quality materials
- 1- or 2-stage level monitoring
- Flexible connection possibilities

Infobox

Order information Page 3.31
Options/accessories Page 3.31
Resistance chart Chapter 5
Installation examples Chapter 5

Technical data

Type	Switching voltage	Switching current	Switching capacity		Max. flow rate		Max. pump stroke volume	Max. viscosity of the medium	Min. density of the medium
	V / AC/DC	A	W	VA	l/h	gal/h	cm³	mPas	kg/dm³
SL-02	max. 48	0.5	10	12	200	53	20	100	1

Dimensional drawing

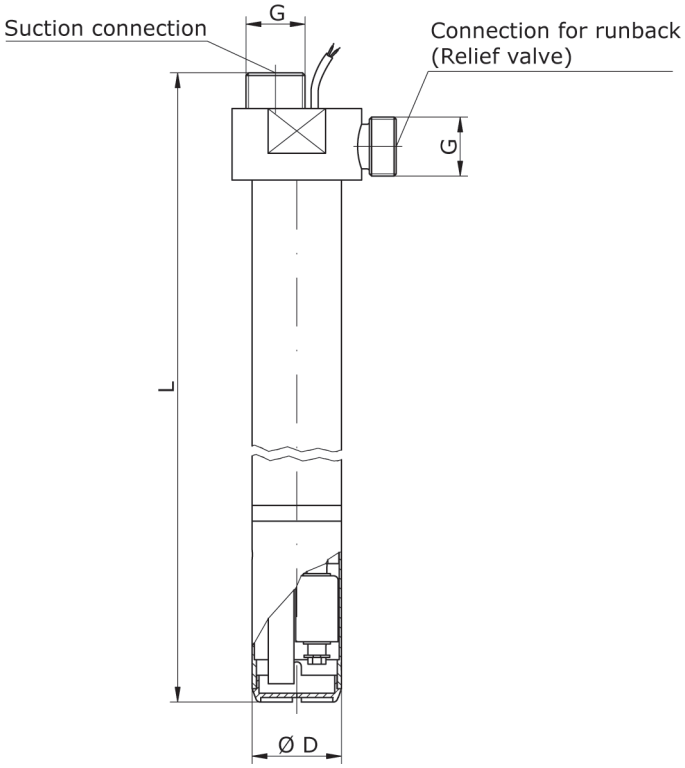

Dimensional chart

Indications in mm / inch

Type	G	D		L	
		mm	in	mm	in
SL-02	G 3/4	40	1,57	630	24,80
SL-02	G 3/4	40	1,57	1000	39,37
SL-02	G 3/4	40	1,57	1200	47,24

© 2015 sera GmbH
Subject to technical modifications.

Order information

Suction lance

Basic design:
- Materials:
- PVC-U
- Foot valve: PVDF-FRP
- Valve seal and ball: PTFE
- Suction basket and level switch: PP
- Connection seal: FPM
- Level switch one-stage, closing or opening when floating down
- Length of cable: min. 3 m (9,8 ft)
- Free cable ends

Type	Thread connection	L		Material PVC-U/FPM	
		mm	in	Article-No.	
SL-02	G 3/4	630	24,80	30058007	
SL-02	G 3/4	1.000	39,37	30058008	
SL-02	G 3/4	1.200	47,24	37600264	

Options/Accessories			SL-02	×
level switch 2-stage	Level switch 2-stage design „closing when floating down“		▲	
Special length	Special length		▲	
Connection cable	App. 3m with connection plug M12		❍	
Connection sealings 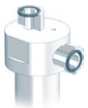	FPM		●	
	EPDM		❍	
	FEP-covered		▲	
Barrel connection adapter	for external thread G=S65 x 5 DIN2781	PP/FPM	90011762	
		PP/EPDM	90011763	
	for internal thread G=2 fine thread steel cask DIN-ISO 228-1	PP/FPM	90011770	
		PP/EPDM	90011771	
	for internal thread G=v. empty/tri-sure BCS 56x4 EN12708	PP/FPM	90011768	
		PP/EPDM	90011769	
	for external thread G=DIN51	PP/FPM	90011766	
		PP/EPDM	90011767	
	ffor wall bushing G=2 wall thichness S=max. 6mm	PP//PVC/FPM	90011772	
		PP/PVC/EPDM	90011773	
	Further adapter		✆	

● = Basis design – = not available ▲ = with add. price ✆ = on request ❍ = without add. price Art.-No. = available in basic design/ accessories

© 2015 **sera GmbH**
Subject to technical modifications.

SLP-15x.1 in survey

- Compact and robust design
- Easy to operate
- Maintenance-free
- Protection tube
- Safe
- High-quality materials
- 1- (SLP-151.1) or 2-stage (SLP-152.1) level monitoring
- Enclosure IP65

Infobox

Order information Page 3.33
Options/accessories Page 3.33
Resistance chart Chapter 5
Installation examples Chapter 5

Technical data

Type	Nominal width	Switching voltage	Switching capacity		Max. flow rate		Max. pump stroke volume	Max. viscosity of the medium	Min. density of the medium
	DN	V / AC/DC	W	VA	l/h	gal/h	cm³	mPas	kg/dm³
SLP-151.1	15	48	10	12	700	185	100	100	1
SLP-152.1	15	48	10	12	700	185	100	100	1

Dimensional drawing

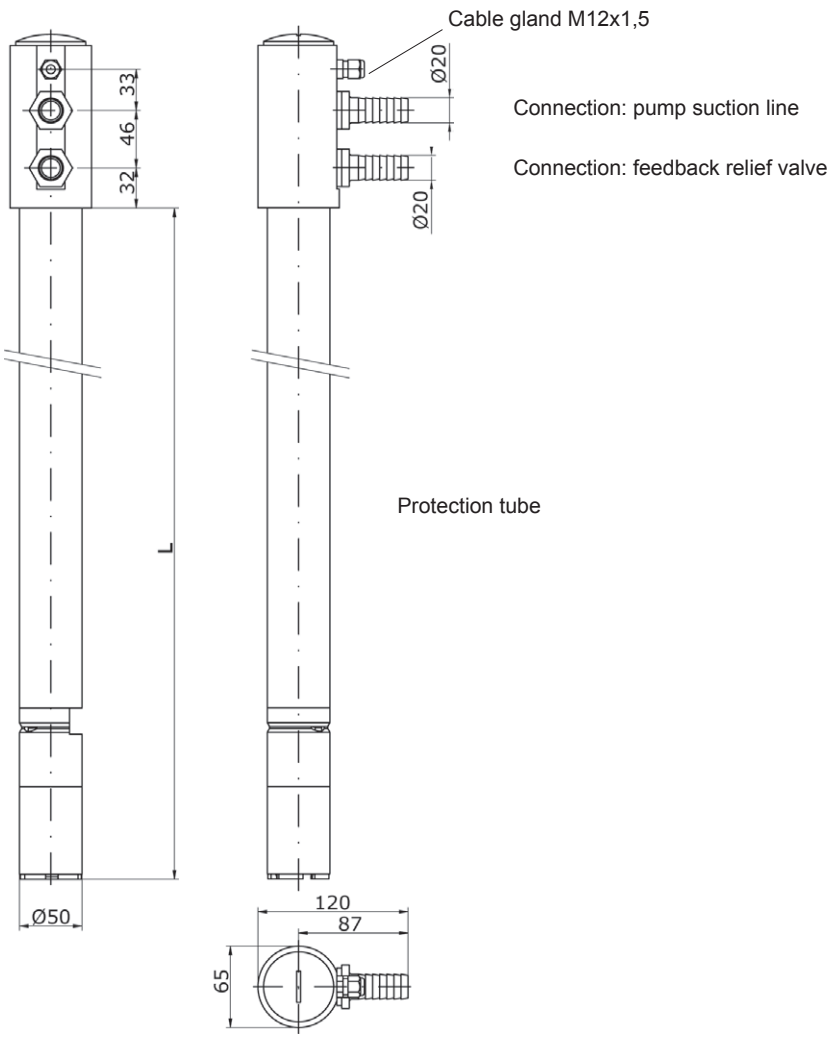

Dimensional chart

Indications in mm / inch

Type	Nominal width DN	L	
		mm	in
SLP-15x.1	15	750	29,53
SLP-15x.1	15	1000	39,37
SLP-15x.1	15	1250	49,21

© 2015 sera GmbH
Subject to technical modifications.

Order information

Suction lance

Basic design:
- Materials:
- PVC-U
- Foot valve: PVC-U
- Sealings: FPM or EPDM
- Ball: PTFE
- Level switch: PP, closing when floating up
- Connection for control cable

Type	L		level switch	Material			
				PVC-U/EPDM		PVC-U/FPM	
	mm	in		Article-No.		Article-No.	
SLP-151.1	750	29,53	1-stage	37604108		37604114	
SLP-151.1	1.000	39,37	1-stage	37604109		37604115	
SLP-151.1	1.250	49,21	1-stage	37604110		37604116	
SLP-152.1	750	29,53	2-stage	37604111		37604117	
SLP-152.1	1.000	39,37	2-stage	37604112		37604118	
SLP-152.1	1.250	49,21	2-stage	37604113		37604119	

Options/Accessories		SLP-151.1 SLP-152.1	x
Tank screwd connection BCS 70x6 Di=50	Tank screwing for drum with internal thread Aeration only via the tolerance of the internal diamter of the adapter or via a seperate aeration of the drum	90028923	
Tank screwd connection G2, IBC	Tank screwing for IBC cover with G2 internal thread Aeration and deaeration via adapter (Gastight execution with option „hose set“ (90028921) possible)	90028922	
Tank screwd connection G2, universal	Tank screwing (bulkhead fitting) with flat seal and octagonal nut (PVC-U). Aeration and deaeration via adapter (Gastight execution with option „hose set“ (90028921) possible)	90028920	
Hose set	G1/4, d12, L3000	90028921	
Tubular	Tubular to keep ready/hold the suction lance during the exchange of a drum	90028919	
Control cable	Control cable for level input. M12x1, cable socket 3-pole, 5m, supplied separately	90031245	

● = Basis design – = not available ▲ = with add. price ✆ = on request ❍ = without add. price Art.-No. = available in basic design/ accessories

© 2015 **sera GmbH**
Subject to technical modifications.

S-01 in survey

- Compact and robust design
- Maintenance-free
- Easy to operate
- High-quality materials

Infobox

Order information Page 3.35
Options/accessories Page 3.35
Resistance chart Chapter 5
Installation examples Chapter 5

Technical data

Type	Nominal width DN	G	Max. flow rate l/h	Max. flow rate gal/h	Max. pump stroke volume cm³	Max. viscosity of the medium mPas	Min. density of the medium kg/dm³
S-01	10	G 3/4	200	53	20	100	1
S-01	15	G 3/4	200	53	20	100	1
S-01	15	G 1	600	159	103	100	1
S-01	20	G 1	600	159	103	100	1
S-01	20	G 1 1/4	1450	383	245	100	1

Dimensional drawing

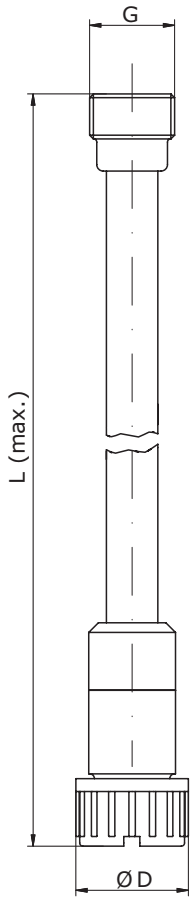

Dimensional chart

Indications in mm / inch

Type	DN	G	D PVC-U mm	D PVC-U in	D PP mm	D PP in	D PVDF mm	D PVDF in	L (max.) mm	L (max.) in
S-01	10	G 3/4	38	1,50	35	1,38	35	1,38	1500	59,06
S-01	15	G 3/4	53	2,09	–	–	–	–	1500	59,06
S-01	15	G 1	53	2,09	–	–	–	–	1500	59,06
S-01	20	G 1	63	2,48	52	2,05	52	2,05	1500	59,06
S-01	20	G 1 1/4	63	2,48	52	2,05	52	2,05	1500	59,06

© 2015 sera GmbH
Subject to technical modifications.

Order information

Suction lance

Basic design:
- Materials: PVC-U / PP / PVDF
- Seal element:
- DN10: PTFE ball
- DN15 / DN20: PVC-U - PVC-U-cone
- DN20: PP/PVDF - PTFE ball

Type	Nominal width DN	Connection external thread	Material							
			PVC-U/EPDM		PVC-U/FPM		PP/PP-FRP/FPM		PVDF/ PVDF-FRP/FPM	
			Article-No.		Article-No.		Article-No.		Article-No.	
S-01	10	G 3/4	37600705		37600817		37603596		37601189	
S-01	15	G 3/4	30091010		37600349		–		–	
S-01	15	G 1	30091011		37600352		–		–	
S-01	20	G 1	30091018		37600360		37601487		✆	
S-01	20	G 1 1/4	30091019		37600369		37605544		37603503	

● = Basis design – = not available ▲ = with add. price ✆ = on request ❍ = without add. price Art.-No. = available in basic design/ accessories

3

© 2015 **sera GmbH**
Subject to technical modifications.

S-01 in survey

- Compact and robust design
- Maintenance-free
- Easy to operate
- High-quality materials

Infobox

Order information Page 3.37
Options/accessories Page 3.37
Resistance chart Chapter 5
Installation examples Chapter 5

Technical data

Type	Nominal width DN	G	Max. flow rate l/h	Max. flow rate gal/h	Max. pump stroke volume cm³	Max. viscosity of the medium mPas	Min. density of the medium kg/dm³
S-01	10	G 3/4	200	53	20	100	1
S-01	15	G 3/4	200	53	20	100	1
S-01	15	G 1	600	159	103	100	1
S-01	20	G 1	600	159	103	100	1
S-01	20	G 1 1/4	1450	383	245	100	1

Dimensional drawing

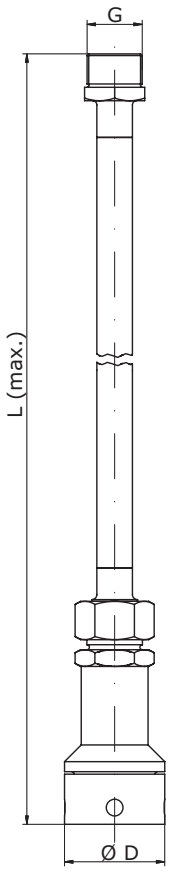

Dimensional chart

Indications in mm / inch

Type	DN	G	D mm	D in	L (max.) mm	L (max.) in
S-01	10	G 3/4	60	2,36	1500	59,06
S-01	15	G 3/4	60	2,36	1500	59,06
S-01	15	G 1	60	2,36	1500	59,06
S-01	20	G 1	60	2,36	1500	59,06
S-01	20	G 1/4	60	2,36	1500	59,06

© 2015 sera GmbH
Subject to technical modifications.

Order information

Suction lance

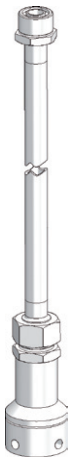

Basic design
- Material: 1.4571
- Valve balls: 1.4401
- Sealings: EPDM

Type	Nominal width DN	Connection external thread	Material 1.4571/EPDM Article-No.	
S-01	10	G 3/4	37600379	
S-01	15	G 3/4	37600382	
S-01	15	G 1	37600385	
S-01	20	G 1	37600391	
S-01	20	G 1 1/4	37600394	

Options/Accessories

			S-01	×
Sealings	DN 10	EPDM	●	
		FPM	❍	
		FEP-covered	▲	
	DN 15	EPDM	●	
		FPM	❍	
		FEP-covered	▲	
	DN 20	EPDM	●	
		FPM	❍	
		FEP-covered	▲	

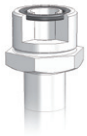

● = Basis design – = not available ▲ = with add. price ✆ = on request ❍ = without add. price Art.-No. = available in basic design/ accessories

3

© 2015 **sera GmbH**
Subject to technical modifications.

© 2015 **sera GmbH**
Subject to technical modifications.

Check valves / Injection fittings		Type	max. flow rate	Page
	Dosing valves	691.1 ... 693.1	up to 1500 l/h	3.40
	Dosing valves	681.1 ... 687.1	up to 6000 l/h	3.44
	Injection fittings	8061.1 ... 8063.1	up to 1500 l/h	3.46
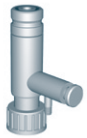	Vent valve, manual	8152	up to 190 l/h	3.48

© 2015 **sera GmbH**
Subject to technical modifications.

691.1 to 693.1 in survey

- Compact design
- Easy to mount
- Maintenance free
- Flexible installation
- High-quality materials

Infobox

Order information Page 3.41
Options/accessories Page 3.41
Resistance chart Chapter 5
Installation examples Chapter 5

Technical data

Type	Nominal width DN	Max. admissible operating pressure				Opening pressure			
		Plastic		1.4571		PVC-U/1.4571		PP-FRP/PVDF-FRP	
		bar	psi	bar	psi	bar	psi	bar	psi
691.1	8	10	145	63	913,5	1	14,5	0,5	7,25
692.1	15	–	–	40	580	1	14,5	–	–
693.1	20	10	145	25	362,5	1	14,5	0,5	7,25

Dimensional drawing

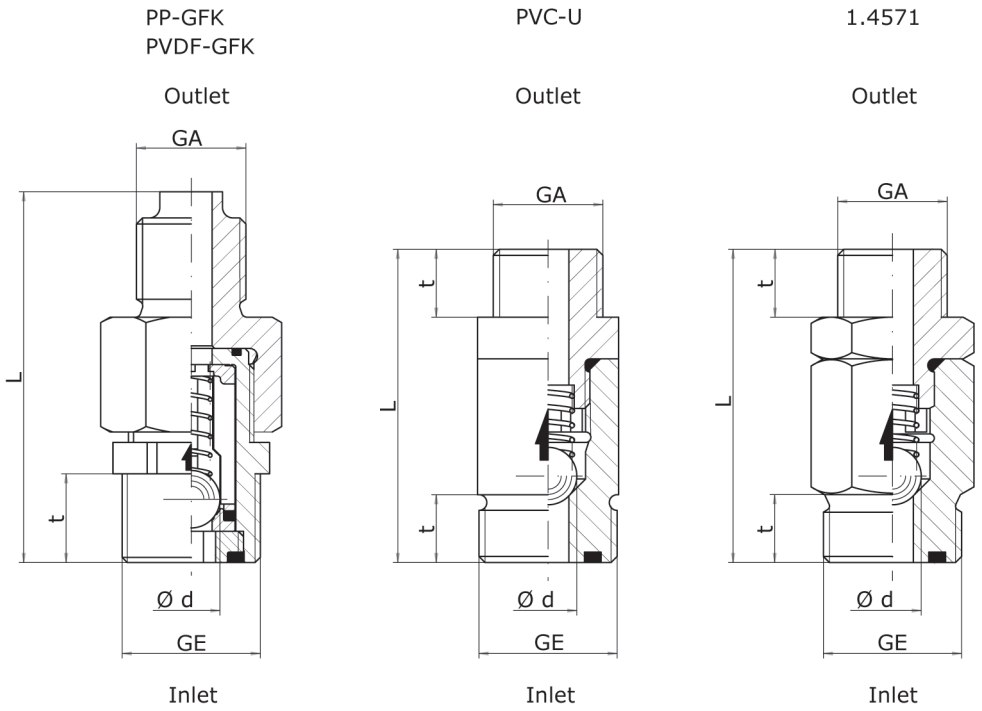

Dimensional chart

Indications in mm / inch

Type	GE	GA	d						L						t					
			PVC-U		PP-FRP/ PVDF-FRP		1.4571		PVC-U		PP-FRP/ PVDF-FRP		1.4571		PVC-U		PP-FRP/ PVDF-FRP		1.4571	
			mm	in	mm	in	mm	in	mm	in	mm	in	mm	in	mm	in	mm	in	mm	in
691.1	G 3/4	R 1/2	11	0,43	12	0,47	11	0,43	60	2,36	71	2,80	60	2,36	13	0,51	18	0,71	13	0,51
692.1	G 1	R 1	–	–	–	–	25	0,98	–	–	–	–	104	4,09	–	–	–	–	17	0,67
693.1	G 1 1/4	R 1 1/4	–	–	25	0,98	25	0,98	–	–	101	3,98	119	4,69	–	–	25	0,98	20	0,79

- weights on request

© 2015 sera GmbH
Subject to technical modifications.

Order information

Dosing valves

Basic design:
- Valve body: PVC-U
- Valve balls: PTFE
- Valve seals: FPM
- Spring: Hastelloy C4

Type	Thread connection Inlet - Outlet	Material PVC-U	
		Article-No.	
691.1	G 3/4 - R 1/2	37602502	

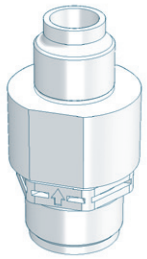

Basic design:
- Valve body:
- Type 691.1 made of PP/PP-FRP or PVDF/PVDF-FRP
- Type 693.1 made of PP-FRP or PVDF-FRP
- Valve balls: PTFE
- Valve seals: FPM
- Spring: Hastelloy C4

Type	Thread connection Inlet - Outlet	Material							
		PP/PP-FRP		PVDF/PVDF-FRP		PP-FRP		PVDF-FRP	
		Article-No.		Article-No.		Article-No.		Article-No.	
691.1	G 3/4 - R 1/2	37603134		37604930		–		–	
693.1	G 1 1/4 - R 1 1/4	–		–		37603317		✆	

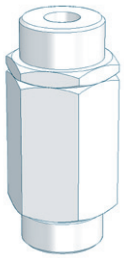

Basic design:
- Valve body: 1.4571
- Valve ball: 1.4401
- Valve seals: FPM
- Spring: Hastelloy C4

Type	Thread connection Inlet - Outlet	Material 1.4571	
		Article-No.	
691.1	G 3/4 - R 1/2	37600222	
692.1	G 1 - R 1	37600224	
693.1	G 1 1/4 - R 1 1/4	37600226	

© 2015 **sera GmbH**
Subject to technical modifications.

Options/Accessories			691.1	x	692.1	x	693.1	x
Valve balls	PVC-U	PTFE	●		–		–	
		1.4401	❍		–		–	
	PP/PP-FRP	PTFE	●		–		●	
		1.4401	❍		–		❍	
	PVDF/PVDF-FRP	PTFE	●		–		●	
		1.4401	❍		–		❍	
	1.4571	PTFE	❍		❍		❍	
		1.4401	●		●		●	
	■ Operating pressure with PTFE-ball max. 10 bar							
Valve sealings	PVC-U	FPM	●		–		–	
		FEP-covered	▲		–		–	
		EPDM	❍		–		–	
	PP/PP-FRP	FPM	●		–		●	
		FEP-covered	▲		–		▲	
		EPDM	❍		–		❍	
	PVDF/PVDF-FRP	FPM	●		–		●	
		FEP-covered	▲		–		▲	
		EPDM	❍		–		❍	
	1.4571	FPM	●		●		●	
		FEP-covered	▲		▲		▲	
		EPDM	❍		❍		❍	
Spring load	Spring made of Hastelloy C4, opening pressure 1bar, Valve body material PVC		●		–		–	
	Spring made of Hastelloy C4, opening pressure 1bar, Valve body material 1.4571		●		●		●	
	Spring made of Hastelloy C4, opening pressure 0,5bar, Valve body material PP/PP-FRP, PVDF/PVDF-FRP		●		–		●	
	Spring made of Hastelloy C4, opening pressure 1,5bar, Valve body material PP/PP-FRP, PVDF/PVDF-FRP		❍		–		❍	

● = Basis design – = not available ▲ = with add. price ✆ = on request ❍ = without add. price Art.-No. = available in basic design/ accessories

3

© 2015 **sera GmbH**
Subject to technical modifications.

© 2015 **sera GmbH**
Subject to technical modifications.

681.1 bis 687.1 in survey

- Compact design
- Easy to mount
- Maintenance-free
- Flexible installation
- High-quality materials
- Soft seated

Infobox

Order information Page 3.45
Options/accessories Page 3.45
Resistance chart Chapter 5
Installation examples Chapter 5

Technical data

Type	Nominal width	Max. admissible operating pressure		Opening pressure		Max. flow rate		Max. pump stroke volume
	DN	bar	psi	bar	psi	l/h	gal/h	cm³
681.1	10	10	145	0,06	0,73	200	53	20
682.1	15	10	145	0,06	0,73	600	159	100
683.1	20	10	145	0,06	0,73	1100	291	190
684.1	25	10	145	0,06	0,73	1500	396	250
685.1	32	10	145	0,06	0,73	2000	528	700
686.1	40	10	145	0,06	0,73	4000	1057	1400
687.1	50	10	145	0,06	0,73	6000	1585	2000

3

Dimensional drawing

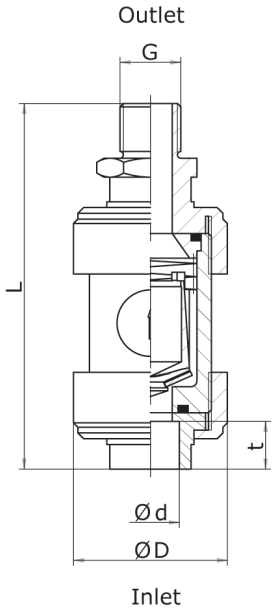

Dimensional chart

Indications in mm / inch

Type	G	d		D		L				t			
						PVC-U		PP/PVDF		PVC-U		PP/PVDF	
		mm	in	mm	in	mm	in	mm	in	mm	in	mm	in
681.1	R 1/2	16	0,63	53	2,09	125,5	4,94	118,0	4,65	16,5	0,65	13,0	0,51
682.1	R 1/2	20	0,79	53	2,09	125,5	4,94	123,5	4,86	16,5	0,65	14,5	0,57
683.1	R 3/4	25	0,98	63	2,48	142,5	5,61	142,0	5,59	19,5	0,77	16,0	0,63
684.1	R 1	32	1,26	71	2,80	156,5	6,16	156,0	6,14	22,5	0,89	18,0	0,71
685.1	R 1 1/4	40	1,57	86	3,39	176,5	6,95	177,5	6,99	26,5	1,04	20,5	0,81
686.1	R 1 1/2	50	1,97	101	3,98	201,5	7,93	203,5	8,01	31,5	1,24	23,5	0,93
687.1	R 2	63	2,48	118	4,65	236,5	9,31	240,5	9,47	38,5	1,52	27,5	1,08

- weights on request

© 2015 sera GmbH
Subject to technical modifications.

Order information

Dosing valves

Basic design:
- Spring: PTFE-covered
- Connection:
- Inlet:
- with PVC-U with glued bushing
- with PP and PVDF with welded bushing
- Outlet: Thread

Type	Thread connection outlet	Material PVC-U/EPDM		PVC-U/FPM		PP/EPDM		PP/FPM		PVDF/FPM	
		Article-No.		Article-No.		Article-No.		Article-No.		Article-No.	
681.1	R 1/2	37600855		37600701		37600867		37600868		37601375	
682.1	R 1/2	37600856		37600556		37600869		37600870		37601376	
683.1	R 3/4	37600857		37600858		37600878		37600879		37601411	
684.1	R 1	37600859		37600860		37600880		37600881		37601412	
685.1	R 1 1/4	37600861		37600862		37600882		37600883		37601413	
686.1	R 1 1/2	37600863		37600864		37600884		37600885		37601414	
687.1	R 2	37600865		37600866		37600886		37600887		37601415	

Options/Accessories			681.1 up to 683.1	×	684.1	×
Spring for 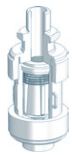	Opening pressure 1,5 bar	PVC-U	▲		✆	
		PP	▲		✆	
		PVDF	▲		✆	

● = Basis design – = not available ▲ = with add. price ✆ = on request ❍ = without add. price Art.-No. = available in basic design/ accessories

3

© 2015 **sera GmbH**
Subject to technical modifications.

8061.1 to 8063.1 in survey

- Easy to mount
- Injection lance for better mixing
- Maintenance-free
- Flexible installation
- High-quality materials

Infobox

Order information Page 3.47
Options/accessories Page 3.47
Resistance chart Chapter 5
Installation examples Chapter 5

Technical data

Type	Nominal width DN	Max. admissible operating pressure		Opening pressure	
		bar	psi	bar	psi
8061.1	10	10	145	0,05	0,73
8062.1	15	10	145	0,05	0,73
8063.1	20	10	145	0,05	0,73

Dimensional drawing

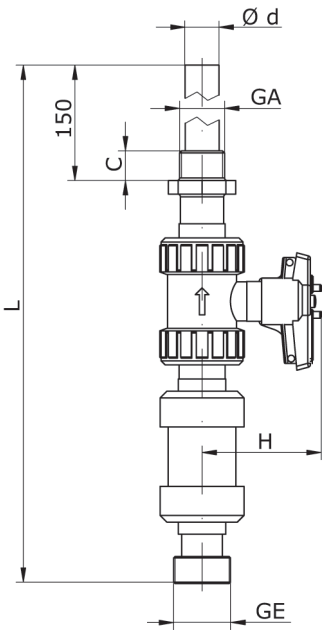

Dimensional chart

Indications in mm / inch

Type	GE	GA	d		L						H		C			
					PVC-U		PP		PVDF				PVC-U		PP/PVDF	
			mm	in	mm	in	mm	in	mm	in	mm	in	mm	in	mm	in
8061.1	G 3/4	R 1/2	16	0,63	390	15,35	427	16,81	438	17,24	72	2,83	17	0,67	17	0,67
8062.1	G 1	R 3/4	20	0,79	409	16,10	439	17,28	446	17,56	72	2,83	19	0,75	19	0,75
8063.1	G 1 1/4	R 1	25	0,98	447	17,60	481	18,94	486	19,13	77	3,03	22	0,87	19	0,75

- weights on request

© 2015 sera GmbH
Subject to technical modifications.

Order information

Injection fitting

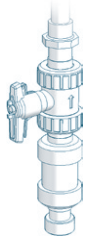

Basic design
- Cone type check valve
- Shut-off ball cock
- Injection lance (l=150mm)

Type	Thread connection Inlet - Outlet	Material PVC-U/EPDM		PVC-U/FPM		PP/EPDM		PP/FPM		PVDF/FPM	
		Article-No.		Article-No.		Article-No.		Article-No.		Article-No.	
8061.1	G 3/4 - R 1/2	37602105		37602106		37602107		37602108		37602109	
8062.1	G 1 - R 3/4	37602110		37602111		37602112		37602113		37602114	
8063.1	G 1 1/4 - R 1	37602115		37602116		37602117		37602118		37602119	

Options/Accessories		8061.1 up to 8063.1	×
Spring for Opening pressure 1,5 bar	PVC-U	▲	
	PP	▲	
	PVDF	▲	

● = Basis design – = not available ▲ = with add. price ✆ = on request ❍ = without add. price Art.-No. = available in basic design/ accessories

3

© 2015 **sera GmbH**
Subject to technical modifications.

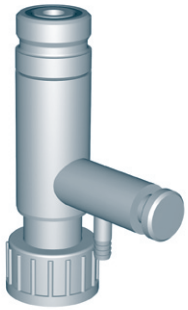

8152 in survey

- Compact design
- Easy to mount
- Maintenance-free
- Hardly any wear and tear
- High-quality materials

Infobox

Order information Page 3.49
Options/accessories Page 3.49
Resistance chart Chapter 5
Installation examples Chapter 5

Technical data

Type	Nominal width DN	Max. admissible operating pressure bar	psi	Max. pump stroke value cm³
8152	8	10	145	20

Dimensional drawing

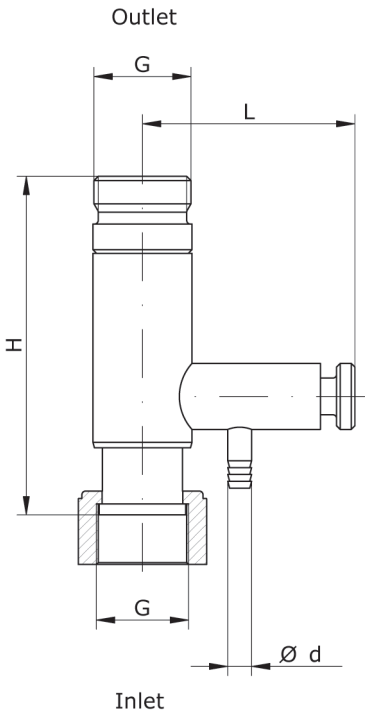

Dimensional chart

All indications in mm / inch

Type	G	d mm	d in	L mm	L in	H mm	H in	Weight kg
8152	G 3/4	6,5	0,26	60	2,36	86	3,39	0,08

- Indication of weight for basic design acc. to order information

© 2015 sera GmbH
Subject to technical modifications.

Order information

Vent valve, manual

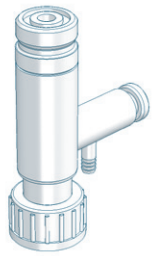

Basic design:
- Ball: PTFE
- Seal: FPM
- Connection: ventilating joint: hose nuzzle d=6,5

Type	Thread connection	Material					
		PVC-U		PP		PVDF	
		Article-No.		Article-No.		Article-No.	
8152	G 3/4	37600531		✆		✆	

Options/Accessories		8152	x
Valve balls	PTFE	●	
	1.4401	❍	
Valve sealings 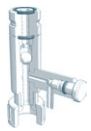	FPM	●	
	EPDM	❍	

● = Basis design – = not available ▲ = with add. price ✆ = on request ❍ = without add. price Art.-No. = available in basic design/ accessories

3

© 2015 **sera GmbH**
Subject to technical modifications.

© 2015 **sera GmbH**
Subject to technical modifications.

Fittings for pump suction side		Type	max. flow quantity	Page
	Priming aids	769.1	up to 35 l/h	3.52
	Priming aids / Siphon vessels	770.2 ... 772.2	up to 4000 l/h	3.54
	Calibration pots	791.1 ... 797.1	up to 4000 l/h	3.56
	Foot valves	732.3 ... 737.3 731 ... 736 781.1 ... 783.1	up to 4000 l/h	3.58

© 2015 **sera GmbH**
Subject to technical modifications.

769.1

769.1 in survey

- Compact design
- Easy to operate
- Improvement of intake characteristics of dosing pumps
- High-quality materials
- Easy to mount

Infobox

Order information Page 3.53
Options/accessories Page 3.53
Resistance chart Chapter 5
Installation examples Chapter 5

Technical data

Type	Nominal width DN	Max. admissible operating pressure		Content	
		bar	psi	Litres	Gallons
769.1	4	-1...+2	-14,5...+29	0,135	0,036

Dimensional drawing

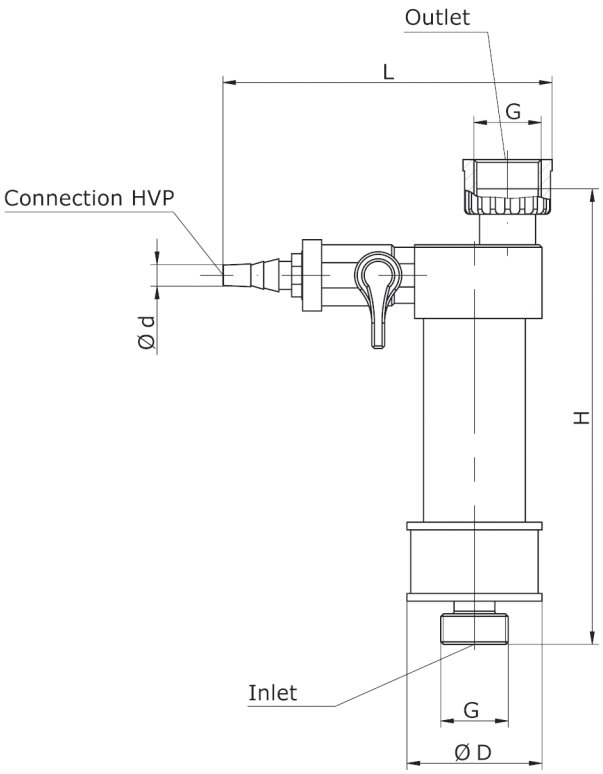

Dimensional chart

Indications in mm / inch

Type	G	d		D		L		H	
		mm	in	mm	in	mm	in	mm	in
769.1	G 3/4	10	0,39	50	1,97	130	5,12	179	7,05

Weights on request

© 2015 sera GmbH
Subject to technical modifications.

Order information

Suction aid

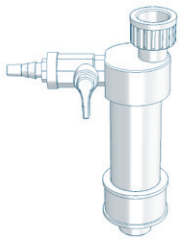

Basic design:
- Shut-off fitting with filling-/ventilating joint, hose nozzle d=10/12
- Connection: Inlet: External thread; Outlet: Internal thread

Type	Thread connection	Material			
		PVC-U/Transp.-PVC/EPDM		PVC-U/Transp.-PVC/FPM	
		Article-No.		Article-No.	
769.1	G 3/4	37600234		37600235	

Options/Accessories	769.1
Hand vacuum pump **Type HVP 1** incl. 1,5 m (4,9 ft) hose with textile-ply PVC, d=12/21, 2 hose clamps 12-20, material: PVC/FPM	90008822

● = Basis design – = not available ▲ = with add. price ✆ = on request ❍ = without add. price Art.-No. = available in basic design/ accessories

3

© 2015 **sera GmbH**
Subject to technical modifications.

770.2 up to 772.2 in survey

- Easy to operate
- Improvement of intake characteristics of dosing pumps
- High-quality materials
- Easy to mount

Infobox

Order information Page 3.55
Options/accessories Page 3.55
Resistance chart Chapter 5
Installation examples Chapter 5

Technical data

Type	Nominal width DN	Max. admissible operating pressure bar	Max. admissible operating pressure psi	Content Litres	Content Gallons
770.2	15	-1...+2	-14,5...+29	2	0,53
771.2	20	-1...+2	-14,5...+29	5	1,32
772.2	40	-1...+2	-14,5...+29	10	2,64

Dimensional drawing

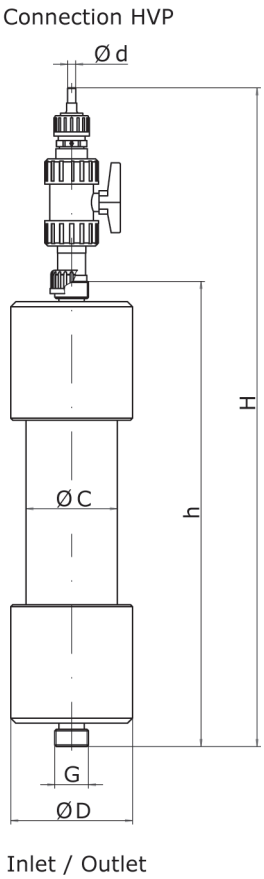

Dimensional chart

Indications in mm / inch

Type	G	d mm	d in	D mm	D in	h mm	h in	H mm	H in	C mm	C in	Weight kg
770.2	G 1	12	0,47	120	4,72	459	18,07	620	24,41	90	3,54	3,2
771.2	G 1 1/4	12	0,47	180	7,09	484	19,06	645	25,39	140	5,51	9,0
772.2	G 2 1/4	12	0,47	220	8,66	637	25,08	798	31,42	160	6,30	13,3

Indication of weight for basic design acc. to order information

© 2015 sera GmbH
Subject to technical modifications.

Order information

Suction aid / Siphon vessel

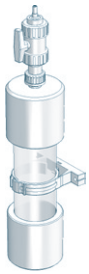

Basic design:
- incl. Fixing clamp (1 piece)
- Shut-off fitting with filling and ventilation joint, hose nozzle d = 12

Type	Thread connection	Material			
		Transparent-PVC/EPDM		Transparent-PVC/FPM	
		Article-No.		Article-No.	
770.2	G 1	30075007		30075008	
771.2	G 1 1/4	30075009		30075010	
772.2	G 2 1/4	30075011		30075012	

Options/Accessories		770.2 up to 772.2	×
Console for wall mounting	PP	90010913	
	1.4301	90010911	
Hand vacuum pump	**Type HVP 1** incl. 1,5m (4,9 ft) hose with textile-ply PVC, d=12/21, 2 hose clamps 12-20, material: PVC/FPM	90008822	

● = Basis design – = not available ▲ = with add. price ✆ = on request ❍ = without add. price Art.-No. = available in basic design/ accessories

3

© 2015 **sera GmbH**
Subject to technical modifications.

791.1 – 797.1

791.1 to 797.1 in survey

- Easy to operate
- Maintenance-free
- Calibration of dosing pumps
- High-quality materials
- Easy to mount

Infobox

Order information Page 3.57
Options/accessories Page 3.57
Resistance chart Chapter 5
Installation examples Chapter 5

Technical data

Type	Nominal width DN	Max. admissible operating pressure bar	Max. admissible operating pressure psi	Content Litres	Content Gallons
791.1	8	-0.5...+2	-7,25... +29	0,1	0,026
792.1	8	-0.5...+2	-7,25... +29	0,5	0,32
793.1	10	-0.5...+2	-7,25... +29	1	0,26
794.1	15	-0.5...+2	-7,25... +29	2	0,53
795.1	20	-0.5...+2	-7,25... +29	5	1,32
796.1	40	-0.5...+2	-7,25... +29	10	2,64
797.1	40	-0.5...+2	-7,25... +29	20	5,28

Dimensional drawing

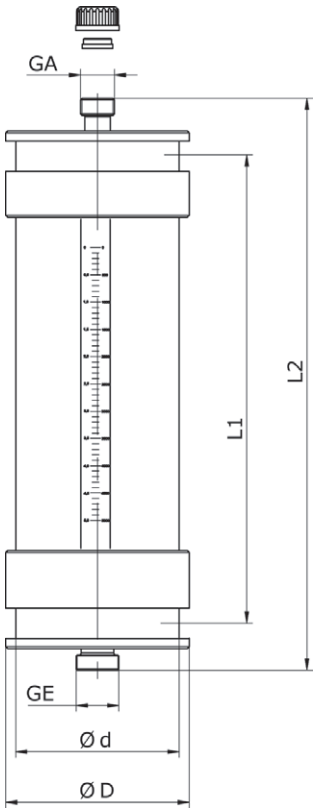

Dimensional chart

Indications in mm / inch

Type	GE	GA	d mm	d in	D mm	D in	L1 mm	L1 in	L2 mm	L2 in	Weight kg
791.1	G 3/4	G 3/4	50	1,97	53	2,09	157	6,18	220	8,66	0,25
792.1	G 3/4	G 3/4	50	1,97	53	2,09	574	22,60	637	25,08	0,40
793.1	G 3/4	G 1	110	4,33	120	4,72	282	11,10	387	15,24	1,75
794.1	G 1	G 1	110	4,33	120	4,72	442	17,40	557	21,93	1,90
795.1	G 1 1/4	G 1	160	6,30	180	7,09	458	18,03	562	22,13	4,40
796.1	G 2 1/4	G 1	160	6,30	180	7,09	728	28,66	850	33,46	5,40
797.1	G 2 1/4	G 1	160	6,30	180	7,09	1269	49,96	1391	54,76	6,75

Indication of weight for basic design acc. to order information

© 2015 sera GmbH
Subject to technical modifications.

Order information

Calibration pot

Basic design:
- incl. fixing clamps (2 pcs.)
- Connection aeration: Type 791.1 and 792.1: G 3/4 with union nut and blind cap
- Connection aeration: Type 793.1 to 797.1: G 1 with union nut and blind cap
- Material: PVC-U/Transp.-PVC

Type	Thread connection	Material			
		PVC-U/EPDM		PVC-U/FPM	
		Article-No.		Article-No.	
791.1	G 3/4	30097002		30097009	
792.1	G 3/4	30097003		30097010	
793.1	G 3/4	30097004		30097011	
794.1	G 1	30097005		30097012	
795.1	G 1 1/4	30097006		30097013	
796.1	G 2 1/4	30097007		30097014	
797.1	G 2 1/4	30097008		30097015	

Options/Accessories			791.1	x	792.1	x	793.1	x	794.1	x	795.1	x	796.1	x	797.1	x
Vent elbow 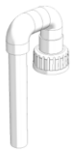	G 3/4	PVC-U	90010968		90010969		–		–		–		–		–	
	G 1	PVC-U	–		–		90010970		90010971		90010972		90010973		90010974	

● = Basis design – = not available ▲ = with add. price ✆ = on request ❍ = without add. price Art.-No. = available in basic design/ accessories

3

© 2015 **sera GmbH**
Subject to technical modifications.

732.3 to 737.3 in survey

- Compact design
- Easy to mount
- Maintenance-free
- High-quality materials

Infobox

Order information Page 3.59
Options/accessories Page 3.59
Resistance chart Chapter 5
Installation examples Chapter 5

Technical data

Type	Nominal width DN	Max. admissible operating pressure		Max. flow rate*		Max. pump stroke volume cm³
		bar	psi	l/h	gal/h	
732.3	15	10	145	600	159	100
733.3	20	10	145	1100	291	190
734.3	25	10	145	1500	396	250
735.3	32	10	145	2000	528	700
736.3	40	10	145	4000	1057	1400
737.3	50	10	145	6000	1585	2000

* max. viscosity 50 mPas

Dimensional drawing

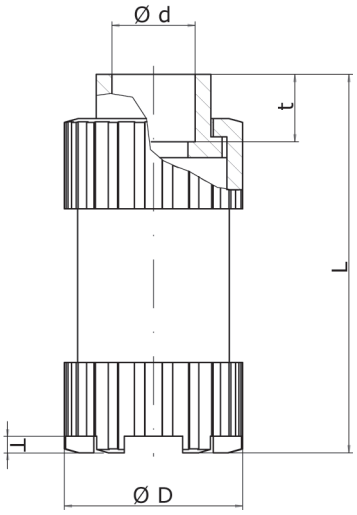

Dimensional chart

Indications in mm / inch

Type	d		D		L		t		T		Weight
	mm	in	mm	in	mm	in	mm	in	mm	in	kg
732.3	20	0,79	53	2,09	92	3,62	16	0,63	4	0,16	0,10
733.3	25	0,98	63	2,48	109	4,29	19	0,75	4,5	0,18	0,15
734.3	32	1,26	70	2,76	118	4,65	22	0,87	5	0,20	0,25
735.3	40	1,57	85	3,35	133	5,24	26	1,02	5,5	0,22	0,35
736.3	50	1,97	101	3,98	144	5,67	31	1,22	5,5	0,22	0,55
737.3	63	2,48	125	4,92	177	6,97	38	1,50	10	0,39	0,90

Indication of weight for basic design acc. to order information

© 2015 sera GmbH
Subject to technical modifications.

Order information

Foot valve

Basic design:
- Valve cone: PVC-U
- Sieve: ETFE
- Mesh size: 1mm (0,04 in)
- Connection: Glueing bush

Type	Connection for pipe d	Material			
		PVC-U/EPDM		PVC-U/FPM	
		Article-No.		Article-No.	
732.3	20	37604801		37604807	
733.3	25	✆		✆	
734.3	32	✆		✆	
735.3	40	✆		✆	
736.3	50	✆		✆	
737.3	63	✆		✆	

● = Basis design – = not available ▲ = with add. price ✆ = on request ❍ = without add. price Art.-No. = available in basic design/ accessories

3

© 2015 **sera GmbH**
Subject to technical modifications.

731 up to 736 in survey

- Compact design
- Easy to mount
- Maintenance-free
- High-quality materials

Infobox

Order information Page 3.61
Options/accessories Page 3.62
Resistance chart Chapter 5
Installation examples Chapter 5

Technical data

Type	Nominal width DN	Max. admissible operating pressure		Max. flow rate		Max. pump stroke volume cm³
		bar	psi	l/h	gal/h	
731	8	10	145	200	53	20
732	15	10	145	600	159	100
733	20	3	21,75	1100	283	190
734	25	3	21,75	1500	396	250
735	32	2	29	2000	528	700
736	40	2	29	4000	1057	1400

Dimensional drawing

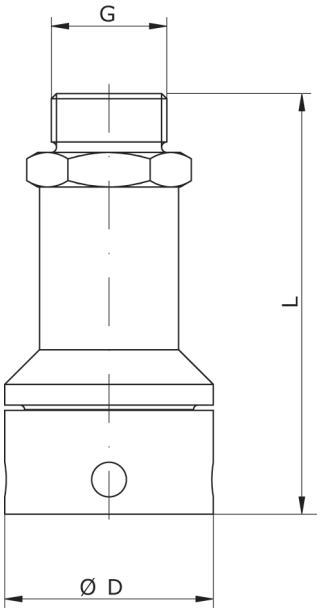

Dimensional chart

Indications in mm / inch

Type	G	D				L	
		PVC-U		PP/PVDF/1.4571			
		mm	in	mm	in	mm	in
731	G 3/4	31	1,22	30	1,18	70	2,76
732	G 1	–	–	60	2,36	121	4,76
733	G 1 1/4	–	–	80	3,15	129	5,08
734	G 1 1/2	–	–	80	3,15	164	6,46
735	G 2	–	–	100	3,94	240	9,45
736	G 2 1/4	–	–	100	3,94	240	9,45

Weights on request

© 2015 sera GmbH
Subject to technical modifications.

Order information

Foot valve

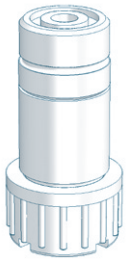

Basic design:
- Valve ball: PTFE
- Valve seals:
- Type 731: EPDM
- Type 732 - 736: FPM
- Sieve: ETFE
- Mesh size: 1 mm
- Connection: Thread

Type	Connection thread	Material PVC-U/EPDM Article-No.		Material PP Article-No.		Material PVDF Article-No.	
731	G 3/4	37601636		–		–	
732	G 1	–		37603896		37604195	
733	G 1 1/4	–		✆		✆	
734	G 1 1/2	–		✆		✆	
735	G 2	–		✆		✆	
736	G 2 1/4	–		✆		✆	

Basic design:
- Valve balls:
- Type 731 - 734 balls made of 1.4401
- Type 735 - 736 balls made of PTFE
- Valve seals: EPDM
- Sieve: 1.4301
- Mesh size: 1 mm
- Connection: Thread

Type	Connection thread	Material 1.4571 Article-No.	
731	G 3/4	37600258	
732	G 1	37600259	
733	G 1 1/4	37600260	
734	G 1 1/2	37600261	
735	G 2	37600262	
736	G 2 1/4	37600263	

● = Basis design – = not available ▲ = with add. price ✆ = on request ❍ = without add. price Art.-No. = available in basic design/ accessories

3

© 2015 **sera GmbH**
Subject to technical modifications.

Options/Accessories			731	732 733	734	735	736
Valve balls	PVC-U	PTFE	●	–	–	–	–
		1.4401	❍	–	–	–	–
	PP/PVDF	PTFE	–	●	✆	✆	✆
		1.4401	–	❍	✆	✆	–
	1.4571	1.4401	●	●	●	–	–
		PTFE	–	❍	❍	●	●
Valve sealings	PVC-U	EPDM	●	–	–	–	–
		FPM	❍	–	–	–	–
	PP/PVDF	EPDM	–	✆	✆	✆	✆
		FPM	–	✆	✆	✆	✆
	1.4571	EPDM	●	✆	●	●	●
		FPM	❍	❍	❍	❍	❍

● = Basis design – = not available ▲ = with add. price ✆ = on request ❍ = without add. price Art.-No. = available in basic design/ accessories

3

© 2015 **sera GmbH**
Subject to technical modifications.

© 2015 **sera GmbH**
Subject to technical modifications.

781.1 to 783.1 in survey

- Compact design
- Easy to mount
- Maintenance-free
- High-quality materials

Infobox

Order information Page 3.65
Options/accessories Page 3.65
Resistance chart Chapter 5
Installation examples Chapter 5

Technical data

Type	Nominal width DN	Max. admissible operating pressure		Max. flow rate		Max. pump stroke volume cm³
		bar	psi	l/h	gal/h	
781.1	8	10	145	200	53	20
783.1	20	10	145	1450	383	190

Dimensional drawing

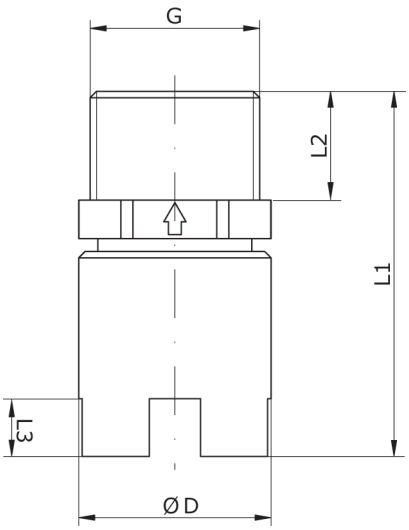

Dimensional chart

Indications in mm / inch

Type	G	D		L1		L2		L3		Weight (kg)	
		mm	in	mm	in	mm	in	mm	in	PP-FRP	PVDF-FRP
781.1	G 3/4	30	1,18	50	1,97	18	0,71	6	0,24	0,02	0,04
783.1	G 1 1/4	50	1,97	80	3,15	25	0,98	6	0,24	0,05	0,2

Indication of weight for basic design acc. to order information

© 2015 sera GmbH
Subject to technical modifications.

Order information

Foot valve

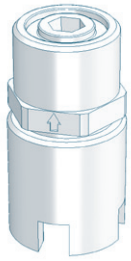

Basic design
- Ball: PTFE
- Sieve: ETFE
- Mesh size: 1mm
- Seal: FPM

Type	Thread connection	Material			
		PP/PP-FRP		PVDF/PVDF-FRP	
		Article-No.		Article-No.	
781.1	G 3/4	37601615		37601188	
783.1	G 1 1/4	37600553		37603504	

Options/Accessories		781.1	x	783.1	x
Valve balls	PTFE	●		●	
	1.4401	❍		❍	
Valve sealings	FPM	●		●	
	EPDM	❍		❍	
	FEP-covered	▲		▲	

● = Basis design – = not available ▲ = with add. price ✆ = on request ❍ = without add. price Art.-No. = available in basic design/ accessories

3

© 2015 **sera GmbH**
Subject to technical modifications.

Connection design	Chapter content	Page
Inserts	Inserts with union nut made of different plastics	4.2
Welding joints	Pipe sockets with union nut made of stainless steel	4.3
Flange connections	Transition pieces with loose flange Transition pieces with fixed flange	4.4
External thread	Transition pieces with NPT external thread	4.5
Hose connections	Hose nozzles with union nut	4.6
	Hose screwings	4.7
Accessories	Dosing hoses	4.8
	Hose clamps	4.9

© 2015 **sera GmbH**
Subject to technical modifications.

Inserts with union nut

Order information

Inserts with union nut

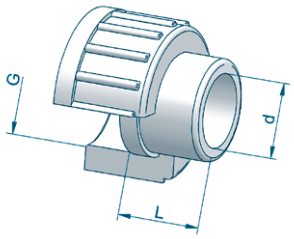

Material design:
- PVC-U-insert:
  - Union nut made of:
    PP-FRP with G 3/4, G 1, G 1 1/4
    PVC-U with G 1 1/2 up to G 2 3/4
- PP-insert:
  - Union nut made of:
    PP-FRP with G 3/4, G 1, G 1 1/4
    PVC-U with G 1 1/2 up to G 2 3/4
- PVDF-insert:
  - Union nut made of:
    PVDF-FRP with G 3/4, G 1, G 1 1/4
    PVDF with G 1 1/2 up to G 2 3/4

G	DN	d		L PVC-U		L PP/PVDF		PVC-U		PP		PVDF	
		mm	in	mm	in	mm	in	Art.-No.	x	Art.-No.	x	Art.-No.	x
G 3/4	8	12	0,47	17	0,67	–	–	90003796		–		–	
G 3/4	10	16	0,63	17	0,67	18	0,71	90003797		90003805		90003804	
G 3/4	15	20	0,79	60	2,36	60	2,36	90003543		90003544		90003546	
G 1	15	20	0,79	19	0,75	19	0,75	90003798		90003808		90003807	
G 1 1/4	15	20	0,79	22	0,87	21	0,83	90004622		90004620		90004621	
G 1 1/4	20	25	0,98	22	0,87	21	0,83	90003799		90003811		90003810	
G 1 1/4	25	32	1,26	74	2,91	70	2,76	90004626		90004624		90004625	
G 1 1/2	25	32	1,26	25	0,98	23	0,91	90003800		90003814		90003813	
G 2	32	40	1,57	29	1,14	25	0,98	90003801		90003817		✆	
G 2 1/4	40	50	1,97	34	1,34	28	1,10	90003802		✆		✆	
G 2 3/4	50	63	2,48	41	1,61	32	1,26	90003803		90003823		✆	

● = Basis design – = not available ▲ = with add. price ✆ = on request ❍ = without add. price Art.-No. = available in basic design/ accessories

Inserts with union nut (north america design)

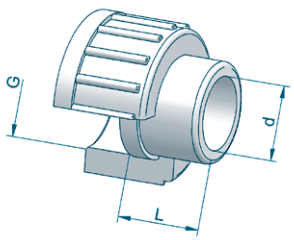

Material design:
- PVC-U-insert:
  - Union nut made of: PP-FRP

G	DN	d	L mm	L in	PVC-U Art.-No.	x
G 3/4	10	3/8“	22	0,87	✆	
G 3/4	10	1/2“	66	2,60	✆	
G 3/4	10	3/4“	72	2,83	✆	
G 1	15	3/4“	75	2,95	✆	
G 1	15	1“	80	3,15	✆	
G 1 1/4	20	1“	74	2,91	✆	
G 1 1/4	20	1 1/4“	81,5	3,21	✆	

© 2015 sera GmbH
Subject to technical modifications.

Order information

Pipe socket with union nut

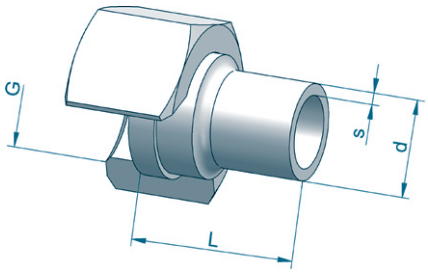

Material design
- Pipe socket: 1.4571
- Union nut: 1.4571

G	DN	d x s		L		1.4571	
		mm	in	mm	in	Art.-No.	x
G 3/4	5	10 x 2,0	0,39 x 0,08	46	1,81	90003831	
G 3/4	8	12 x 2,0	0,47 x 0,08	46	1,81	90003832	
G 3/4	10	17,2 x 2,0	0,68 x 0,08	30	1,18	90008740	
G 3/4	15	21,3 x 2,0	0,84 x 0,08	30	1,18	90008741	
G 1	15	21,3 x 2,0	0,84 x 0,08	32	1,26	90008743	
G 1	20	26,9 x 2,5	1,06 x 0,10	35	1,38	90015935	
G 1 1/4	15	21,3 x 2,0	0,84 x 0,08	35	1,38	90008744	
G 1 1/4	20	26,9 x 2,5	1,06 x 0,10	35	1,38	90008745	
G 1 1/4	25	33,7 x 3,0	1,33 x 0,12	35	1,38	90008746	
G 1 1/2	25	33,7 x 3,0	1,33 x 0,12	37	1,46	90008747	
G 2	32	38 x 3,0	1,50 x 0,12	69	2,72	✆	
G 2 1/4	40	44,5 x 2,0	1,75 x 0,08	70	2,76	✆	

● = Basis design – = not available ▲ = with add. price ✆ = on request ❍ = without add. price Art.-No. = available in basic design/ accessories

4

© 2015 **sera GmbH**
Subject to technical modifications.

Transition piece with flange

Order information

Transition piece with loose flange

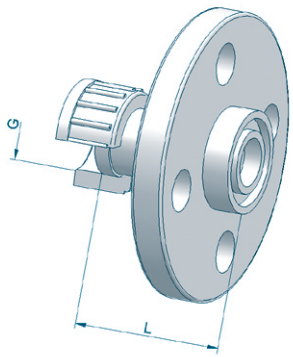

Material design
- PVC-U-design:
  - Loose flange: PVC-U
  - Union nut: PP-FRP
- PP-design:
  - Loose flange:
  - FRP (with DN10)
  - PP with steel insert (as of DN15)
  - Union nut: PP-FRP
- PVDF-design:
  - Loose flange:
  - FRP (with DN10)
  - PP with steel insert (as of DN15)
  - Union nut: PVDF-FRP

Flange connecting dimensions
- acc. DIN 2501, PN10

Connection sealings
- FPM = Basic design
- EPDM = available without add. price

G	DN	L PVC-U		L PP/PVDF		PVC-U/FPM		PP/FPM		PVDF/FPM	
		mm	in	mm	in	Art.-No.	x	Art.-No.	x	Art.-No.	x
G 3/4	10	45	1,77	46	1,81	90003790		90003788		90003789	
G 3/4	15	45	1,77	46	1,81	90003793		90003791		90003792	
G 1	15	52	2,05	50	1,97	90005808		90005809		90005810	
G 1 1/4	15	51	2,01	53	2,09	90005707		90005705		90005706	
G 1 1/4	20	51	2,01	53	2,09	90005704		90005702		90005703	
G 1 1/4	25	51	2,01	53	2,09	90005701		90005699		90005700	

Transition piece with fixed flange

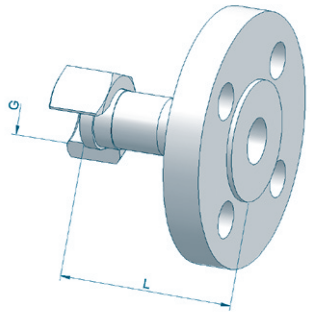

Material design
- Union nut: 1.4571
- Flange: 1.4571

Flange dimensions:
- DIN 2633, PN16
- Ansi B 16,5; 150 lbs/sqin

G	Nominal width DIN2633 DN	Nominal width ANSI B16,5 Zoll	L DIN2633		L ANSI B16,5		1.4571 DIN2633		1.4571 ANSI B16,5	
			mm	in	mm	in	Art.-No.	x	Art.-No.	x
G 3/4	10	1/2“	65	2,56	77,8	3,06	90023375		90011472	
G 3/4	15	3/4“	65	2,56	120	4,72	90011412		90018303	
G 1	15	3/4“	67	2,64	87,3	3,44	90011414		90023332	
G 1 1/4	15	3/4“	70	2,76	87,5	3,44	90011418		90021801	
G 1 1/4	20	1“	73	2,87	90,6	3,57	90011420		90022289	
G 1 1/4	25	1 1/4“	73	2,87	142,2	5,60	90011422		90021802	

© 2015 **sera GmbH**
Subject to technical modifications.

Order information

Transition piece with NPT-external thread (north america design)

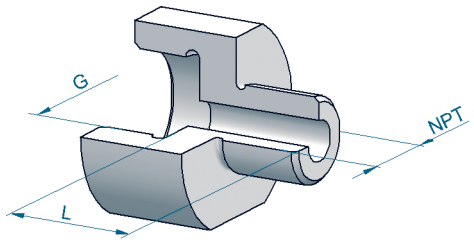

Material design
- Thread joint: PVC
- Union nut: PP-FRP

G	DN	NPT	L mm	L in	1.4571 Art.-No.	x
G 3/4	5	NPT 1/4“	26	1,02	✆	
G 3/4	8	NPT 3/8“	26	1,02	✆	
G 3/4	10	NPT 1/2“	26	1,02	✆	

✆ = on request

© 2015 **sera GmbH**
Subject to technical modifications.

Hose nozzle with union nut

Order information

Hose nozzle with union nut

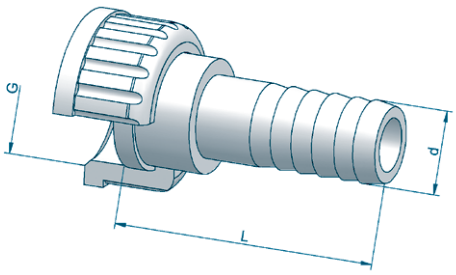

Material design

- PVC-U-hose nozzle
  - Union nut made of:
  - PP-FRP (with G 3/4, G 1, G 1 1/4)
  - PVC-U (with G 1 1/2 to G 2 1/4)
- PP-hose nozzle
  - Union nut made of:
  - PP-FRP (with G 3/4, G 1, G 1 1/4)
  - PP (with G 1 1/2 to G 2 1/4)
- PVDF-hose nozzle
  - Union nut made of:
  - PVDF-FRP (with G 3/4, G 1, G 1 1/4)
  - PVDF (with G 1 1/2 to G 2 1/4)
- 1.4571-hose nozzle
  - Union nut made of:
  - 1.4571

G	DN	d		L		PVC-U		PP		PVDF		1.4571	
		mm	in	mm	in	Art.-No.	x	Art.-No.	x	Art.-No.	x	Art.-No.	x
G 3/4	3	6,5	0,26	30	1,18	90003871		90003869		90003870		90003872	
G 3/4	5	10	0,39	35	1,38	90003875		90003873		90003874		90003876	
G 3/4	8	12	0,47	54	2,13	90003879		90003877		90003878		90003880	
G 3/4	10	16	0,63	60	2,36	90003883		90003881		90003882		90003884	
G 3/4	15	20	0,79	65	2,56	90003887		90003885		90003886		90003888	
G 1	8	13	0,51	57	2,24	90010434		–		–		–	
G 1	15	20	0,79	65	2,56	90003891		90003889		✆		90003892	
G 1 1/4	15	20	0,79	65	2,56	90004633		90004631		90004632		90004634	
G 1 1/4	20	25	0,98	82	3,23	90003895		90003893		90003894		90003896	
G 1 1/4	25	30	1,18	92	3,62	90004637		90004635		90004636		90004638	
G 1 1/2	25	30	1,18	92	3,62	90003899		✆		90003898		90003900	
G 2	32	40	1,57	103	4,06	90003903		90003901		✆		✆	
G 2 1/4	40	50	1,97	120	4,72	90003907		✆		✆		✆	

– = not available ✆ = on request

4

© 2015 **sera GmbH**
Subject to technical modifications.

Order Information

Hose screwing for PVC-hose with cross-textile ply

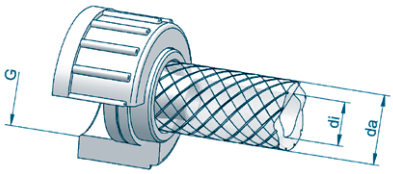

Material design
- Nozzle and supporting bushing: PVC-U
- Union nut: PP-FRP

G	di		da		PVC-U	
	mm	in	mm	in	Art.-No.	×
G 3/4	6	0,24	12	0,47	90011092	
G 3/4	10	0,39	16	0,63	90011093	
G 1	16	0,63	24	0,94	90011094	
G 1	10	0,39	16	0,63	✆	
G 1 1/4	16	0,63	24	0,94	90011095	
G 1 1/4	19	0,75	27	1,06	90011096	

✆ = on request

Hose screwing for PE- and PTFE-hose

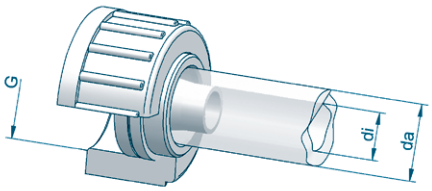

Material design
- Nozzle and supporting bushing: PP
  - Union nut: PP-FRP
- Nozzle and supporting bushing: PVC-U
  - Union nut: PVC-U
- Nozzle and supporting bushing: PTFE
  - Union nut: PTFE
- Nozzle: PTFE
  - Supporting bushing and Union nut: PVC-U
- Nozzle: PTFE
  - Supporting bushing: PP
  - Union nut: PP-FRP

G	di	da	PP		PTFE		PVC-U		PTFE/PVC-U		PTFE/PP	
			Art.-No.	×	Art.-No.	×	Art.-No.	×	Art.-No.	×	Art.-No.	×
G 3/4	4	6	90011697		✆		90016022		✆		✆	
G 3/4	5	8	90016089		–		90018741		–		✆	
G 3/4	8	12	90015981		✆		90025703		✆		✆	
G 3/4	10	12	90016415		✆		90017815		✆		✆	

● = Basis design – = not available ▲ = with add. price ✆ = on request ❍ = without add. price Art.-No. = available in basic design/ accessories

Hose screwing for PE- and PTFE-hose (north america design)

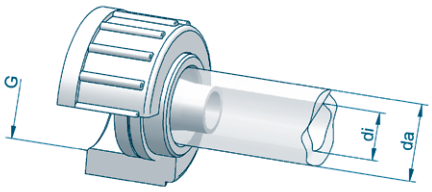

Material design
- Nozzle and supporting bushing: PP
  - Union nut: PP-FRP
- Nozzle and supporting bushing: PVC-U
  - Union nut: PVC-U or PP-FRP

G	di		da		PP		PVC-U	
	mm	in	mm	in	Art.-No.	×	Art.-No.	×
G 3/4	9,65	0,38	12,7	0,50	✆		✆	
G 1	9,65	0,38	12,7	0,50	✆		✆	

© 2015 **sera GmbH**
Subject to technical modifications.

Dosing hose

Order information

Dosing hose made of PVC-U with cross-textile ply

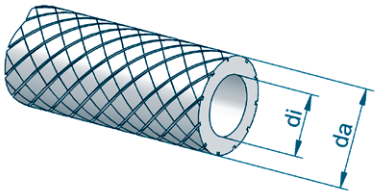

Diameter hose nozzle d	Hose di (internal)	Hose da (external)	up to max. bar	max. length m	PVC-U Art.-No.	x
6,5	6	12	10	50	90005974	
10	10	16	10	50	90005975	
12	12	21	10	50	90005976	
16	16	24	10	50	90005977	
20	19	27	10	50	90005978	
25	25	34	9	25	90005979	
30	30	38	6	25	90010204	
40	38	48	6	25	90005981	

- Available as yard ware (please note max. length)

Dosing hose made of EPDM

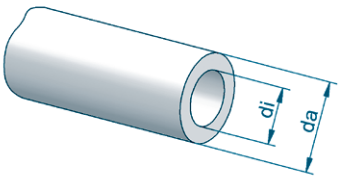

Diameter hose nozzle	Hose di (internal)	Hose da (external)	admissible min. pressure bar	up to max. bar	max. length m	EPDM Art.-No.	x
13	13	20	-0,3	10	40	90009835	
20	19	27	-0,3	10	40	90010443	
25	25	34	-0,3	10	40	90014695	

- Core and external cover made of black EPDM
- Available as yard ware (please note max. length)
- Only for connection with hose nozzle and hose clamps

© 2015 **sera GmbH**
Subject to technical modifications.

Dosing hose made of PE and PTFE

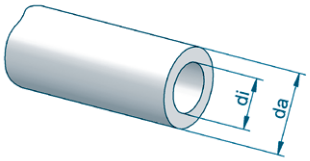

Hose di (internal)	Hose da (external)	up to max bar	max. length m	PE Art.-No.	x	PTFE Art.-No.	x
4	6	10	100	90005503		–	
4	6	15	30	–		90007737	
5	8	10	100	90007740		90007743	
10	12	11	20	–		90007738	
8	12	10	100	90007742		–	

● = Basis design – = not available ▲ = with add. price ✆ = on request ❍ = without add. price Art.-No. = available in basic design/ accessories

- Available as yard ware (please note max. length) / Price per m
- Only for connection with hose screwing

Dosing hose made of XLPE

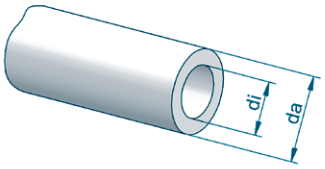

Diameter hose nozzle	Hose di (internal)	Hose da (external)	admissible min. pressure bar	up to max. bar	max. length m	XLPE Art.-No.	x
20	19	34	-0,9	10	40	90010399	
25	25	41	-0,9	10	40	90017980	

- Core made of crosslinked polyethylne (XLPE)
- External cover made of green EPDM with steel spiral
- Available as yard ware (please note max. length)
- Only for connection with hose nozzle and hose clamps

Hose clamp

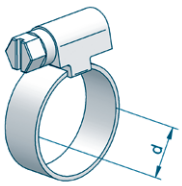

Width d (min)	Width d (max)	for hose up to da	W4 Art.-No.	x
10	16	16	90002343	
16	27	24	90002345	
20	32	27	90002346	
32	50	48	90002348	

- with worm drive
- DIN3017

© 2015 **sera GmbH**
Subject to technical modifications.

© 2015 **sera GmbH**
Subject to technical modifications.

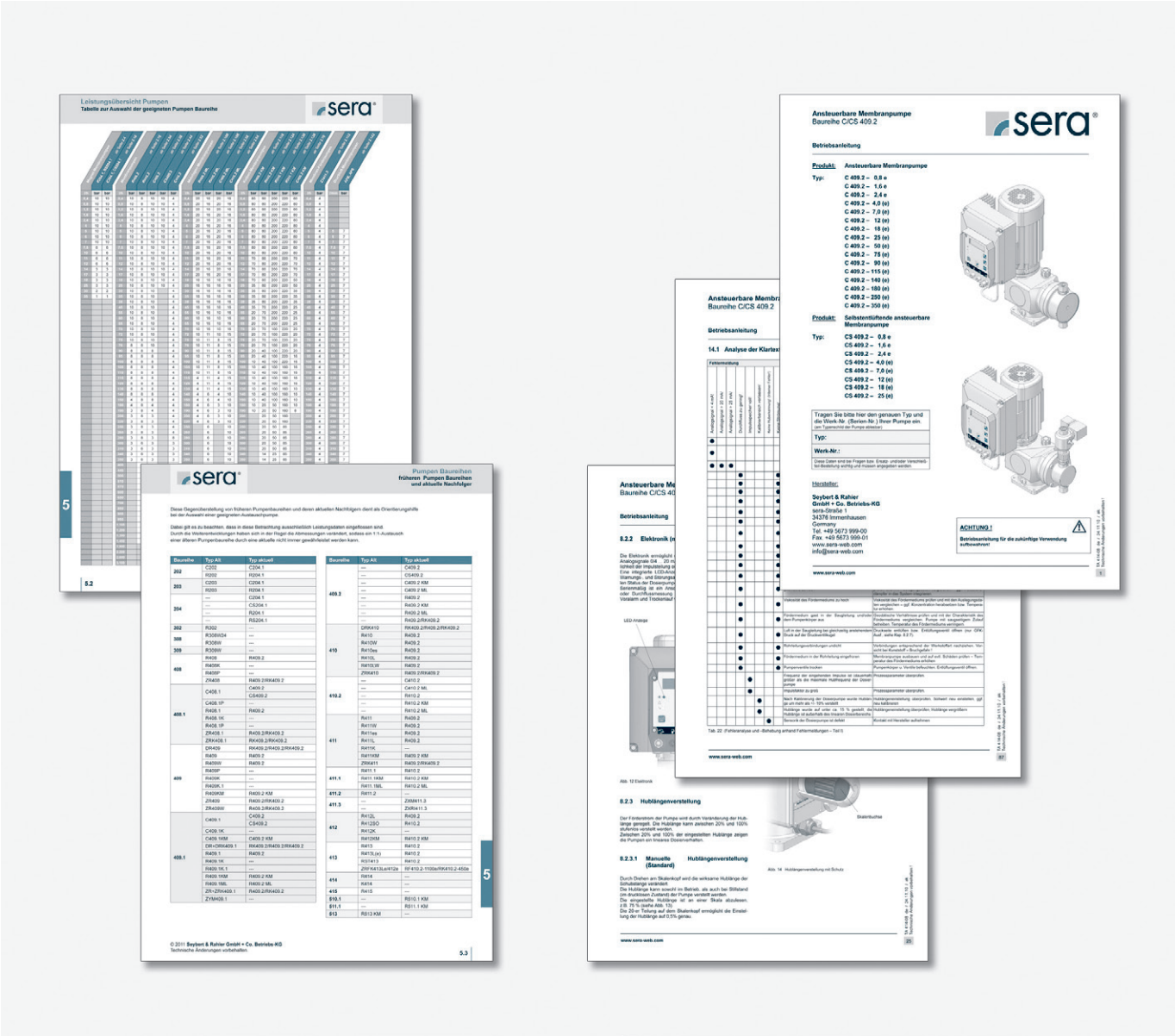

Appendix	Chapter content	Page
Pump performance chart	Table to select the appropriate pump series	5.2
Pump series overview	Comparison of previous and current types of pump series	5.3
Resistance chart	Overview of the resistance of different materials in connection with different chemicals	5.4
Installation examples	Typical installation of dosing pumps in connection with fittings	5.14
Product documentation	**sera** product documentation acc. to EU-Machinery directive 98/37/EC	5.19
Terms and conditions	General terms and conditions, Terms and conditions for maintenance and servicing	5.21

© 2015 **sera GmbH**
Subject to technical modifications.

Solenoid Diaphragm Pumps

l/h[1] gal/h[1]	R204.1, RS204.1 bar psi	C204.1, CS204.1 bar psi
0,4 / 0,11	10 / 145	10 / 145
1,2 / 0,32	10 / 145	10 / 145
2,4 / 0,63	10 / 145	10 / 145
7 / 1,85	10 / 145	10 / 145
10 / 2,64	6 / 87	6 / 87
14 / 3,70	3 / 43,5	3 / 43,5
25 / 6,60	3 / 43,5	3 / 43,5
30 / 7,93	2,5 / 36,25	2,5 / 36,25
35 / 9,25	1,5 / 21,75	1,5 / 21,75

Diaphragm Pumps

l/h[1] gal/h[1]	R409.2 bar psi	C409.2 bar psi	CS409.2 bar psi	R410.2 bar psi	C410.2 bar psi
0,4 / 0,11	10 / 145				
0,8 / 0,21	10 / 145	10 / 145			
1,6 / 0,42	10 / 145	10 / 145	10 / 145		
2,4 / 0,63	10 / 145	10 / 145	10 / 145		
4 / 1,06	10 / 145	10 / 145	10 / 145		
7 / 1,85	10 / 145	10 / 145	10 / 145		
12 / 3,17	10 / 145	10 / 145	10 / 145		
18 / 4,76	10 / 145	10 / 145	10 / 145		
25 / 6,60	10 / 145	10 / 145	10 / 145		
50 / 13,21	10 / 145	10 / 145			
75 / 19,81	10 / 145	10 / 145			
90 / 23,78	8 / 116	8 / 116			
115 / 30	4 / 58	4 / 58			
140 / 37	8 / 116	8 / 116			
180 / 48	4 / 58	4 / 58			
200 / 53				8 / 116	
250 / 66	3 / 43,5	3 / 43,5			
260 / 69					4 / 58
280 / 74				8 / 116	8 / 116
350 / 93	3 / 43,5	3 / 43,5			
450 / 119				6 / 87	
510 / 135					3 / 43,5
570 / 151				6 / 87	6 / 87
700 / 185				5 / 72,5	
850 / 225					2 / 29
900 / 238				5 / 72,5	5 / 72,5
1.100 / 291				5 / 72,5	
1.450 / 383				5 / 72,5	5 / 72,5

Multi-Layer Diaphragm Pumps

l/h[1] gal/h[1]	R409.2 ML bar psi	C409.2 ML bar psi	R410.2 ML bar psi	C410.2 ML bar psi
11 / 2,91	20 / 290	20 / 290		
17 / 4,49	20 / 290	20 / 290		
30 / 7,93	16 / 232	16 / 232		
45 / 11,89	16 / 232	16 / 232		
55 / 14,53			16 / 232	
70 / 18,49			16 / 232	16 / 232
72 / 19,02	10 / 145	10 / 145		
105 / 28			15 / 217,5	
110 / 29	10 / 145	8 / 116		
135 / 36			15 / 217,5	15 / 217,5
150 / 40	4 / 58	4 / 58		
220 / 58	4 / 58	3 / 43,5		
400 / 106			10 / 145	
500 / 132			10 / 145	10 / 145
940 / 248			5 / 72,5	
1.200 / 317			5 / 72,5	5 / 72,5

Piston Diaphragm Pumps

l/h[1] gal/h[1]	R409.2 KM bar psi	C409.2 KM bar psi	R410.2 KM bar psi	R510.1 KM bar psi	R511.1 KM bar psi
7,5 / 1,98	80 / 1.160	80 / 1.160			
10 / 2,64	80 / 1.160	80 / 1.160			
12 / 3,17	70 / 1.015	70 / 1.015			
18 / 4,76	70 / 1.015	50 / 725			
30 / 7,93	35 / 507,5	35 / 507,5	80 / 1.160		
38 / 10,04			80 / 1.160		
45 / 11,89	35 / 507,5	25 / 362,5			
60 / 15,85			70 / 1.015		
65 / 17,17				200 / 2.900	
70 / 18,49	20 / 290	20 / 290			
76 / 20,08			70 / 1.015		
95 / 25,10	20 / 290	16 / 232			
100 / 26					220 / 3.190
120 / 32			40 / 580		
135 / 36	10 / 145	10 / 145			
150 / 40			40 / 580	100 / 1.450	
190 / 50	10 / 145	8 / 116			
220 / 58					160 / 2.320
250 / 66			20 / 290		
300 / 79				50 / 725	
310 / 82			20 / 290		
400 / 106			14 / 203		
440 / 116					85 / 1.232,5
510 / 135			14 / 203		
600 / 159				25 / 362,5	
700 / 185			11 / 159,5		
850 / 225			8 / 116		
900 / 238					40 / 580
950 / 251				16 / 232	
1.300 / 343				11 / 159,5	
1.450 / 383					25 / 362,5
1.650 / 436					20 / 290

Diaphragm Feeding Pumps

l/h[1] gal/h[1]	ZX411.3 bar psi
2.200 / 581	4 / 58
2.600 / 687	4 / 58
3.100 / 819	4 / 58

Air Pressure Diaphragm Pumps

l/min[1] gal/min[1]	APB, APE bar psi
5 / 1,32	7 / 101,5
15 / 3,96	7 / 101,5
30 / 7,93	7 / 101,5
45 / 11,89	7 / 101,5
90 / 23,78	7 / 101,5
100 / 26	7 / 101,5
150 / 40	7 / 101,5
200 / 53	7 / 101,5
340 / 90	7 / 101,5
650 / 172	7 / 101,5
850 / 225	7 / 101,5

[1] Flow rate Q_N of the assigned pump type (e.g. 0,4 l/h (0,11 gal/h) = R409.2-0,4e = 0 - 0,4 l/h (0 - 0,11 gal/h)).
For the usable linear dosing range of each pump type, see data sheet for the pump.

© 2015 **sera GmbH**
Subject to technical modifications.

This comparison between the previous pump series and their current successors is just an orientation aid for the selection of a suitable replacement pump.

It should be pointed out that only performance data were considered in this study.
Due to the development the dimensions normally changed so that a pump of the previous pump series cannot always be replaced 1:1 with a pump of the current series.

Series	previous type	current type
202	C202	C204.1
	R202	R204.1
203	C203	C204.1
	R203	R204.1
204	---	C204.1
	---	CS204.1
	---	R204.1
	---	RS204.1
302	R302	---
308	R308W24	---
	R308W	---
309	R309W	---
408	R408	R409.2
	R408K	---
	R408P	---
	ZR408	R409.2/RK409.2
408.1	C408.1	C409.2
		CS409.2
	C408.1P	---
	R408.1	R409.2
	R408.1K	---
	R408.1P	---
	ZR408.1	R409.2/RK409.2
	ZRK408.1	RK409.2/RK409.2
409	DR409	RK409.2/R409.2/RK409.2
	R409	R409.2
	R409W	R409.2
	R409P	---
	R409K	---
	R409K.1	---
	R409KM	R409.2 KM
	ZR409	R409.2/RK409.2
	ZR409W	R409.2/RK409.2
409.1	C409.1	C409.2
		CS409.2
	C409.1K	---
	C409.1KM	C409.2 KM
	DR+DRK409.1	RK409.2/R409.2/RK409.2
	R409.1	R409.2
	R409.1K	---
	R409.1K.1	---
	R409.1KM	R409.2 KM
	R409.1ML	R409.2 ML
	ZR+ZRK409.1	R409.2/RK409.2
	ZYM409.1	---

Series	previous type	current type
409.2	---	C409.2
	---	CS409.2
	---	C409.2 KM
	---	C409.2 ML
	---	R409.2
	---	R409.2 KM
	---	R409.2 ML
	---	R409.2/RK409.2
410	DRK410	RK409.2/R409.2/RK409.2
	R410	R409.2
	R410W	R409.2
	R410es	R409.2
	R410L	R409.2
	R410LW	R409.2
	ZRK410	R409.2/RK409.2
410.2	---	C410.2
	---	C410.2 ML
	---	R410.2
	---	R410.2 KM
	---	R410.2 ML
411	R411	R409.2
	R411W	R409.2
	R411es	R409.2
	R411L	R409.2
	R411K	---
	R411KM	R409.2 KM
	ZRK411	R409.2/RK409.2
411.1	R411.1	R410.2
	R411.1KM	R410.2 KM
	R411.1ML	R410.2 ML
411.2	R411.2	---
411.3	---	ZXM411.3
	---	ZXRI411.3
412	R412L	R409.2
	R412SO	R410.2
	R412K	---
	R412KM	R410.2 KM
413	R413	R410.2
	R413L(e)	R410.2
	RST413	R410.2
	ZRFK413Le/412e	RF410.2-1100e/RK410.2-450e
414	R414	---
	K414	---
415	R415	---
510.1	---	R510.1 KM
511.1	---	R511.1-KM
	---	XM511.1 KM
513	R513 KM	---

© 2015 **sera GmbH**
Subject to technical modifications.

Chemical attack		Attributes				Chemical resistance (● = resistant)																	
Medium	Chemical formula	Concentration Gew. %	Temperature °C	Conductivity > 5µS/cm	Density < 1 g/cm³	PVC-U	PVC-transparent	PP	PP-FRP	PE	PVDF	PVDF-FRP	1.4571 / 1.4581	1.4401	1.4122v	Glass	EPDM	CSM	FPM	PTFE	PTFE-faced	FEP-coverd
A																						
Acetic acid	H_3C-COOH	25	20	●		●	●	●	●	●	●	●	●	●		●	●	●		●	●	●
Acetic acid	H_3C-COOH	25	40	●				●	●	●	●	●	●	●		●	●			●	●	●
Acetic acid	H_3C-COOH	50	20	●				●	●	●	●	●	●	●		●				●	●	●
Acetic acid	H_3C-COOH	50	40	●				●	●	●	●	●	●	●		●				●	●	●
Acetic acid	H_3C-COOH	80	20	●									●	●						●		●
Acetic acid	H_3C-COOH	80	40	●									●	●						● 4)		●
Acetic acid	H_3C-COOH	99	20	●									●	●						●		●
Acetic acid	H_3C-COOH	99	40	●									●	●						● 4)		●
Acetone	CH_3CO-CH_3	100	50		●			●	●	●			●	●			●			●	●	●
Alum	$KAL(SO_4)_2$*$12H_2O$	12	40	●		●	●	●	●	●	●	●	●	●		●	●	●	●	●	●	●
Alum	$KAL(SO_4)_2$*$12H_2O$	12	60	●				●	●	●	●	●	●	●			●	●	●	●	●	●
Aluminium chloride	$AlCl_3$	30	40	●		●		●	●	●	●	●				●	●	●	●	●	●	●
Aluminium chloride	$AlCl_3$	30	60	●				●	●	●	●	●					●	●	●	●	●	●
Aluminium sulphate	$Al_2(SO_4)_3$	25	40	●		●		●	●	●	●	●	●	●		●	●	●	●	●	●	●
Aluminium sulphate	$Al_2(SO_4)_3$	25	60	●				●	●	●	●	●	●	●			●	●	●	●	●	●
Ammonium chloride	NH_4Cl	25	20	●		●		●	●	●	●	●	●	●		●	●	●	●	●	●	●
Ammonium chloride	NH_4Cl	25	40	●		●		●	●	●	●	●	●	●		●	●	●	●	●	●	●
Ammonium chloride	NH_4Cl	25	60	●				●	●	●	●	●					●	●	●	●	●	●
Ammonium hydroxide	NH_4OH	25	20	●	●	●		●	●	●	●	●	●	●		●	●	●		●	●	●
Ammonium hydroxide	NH_4OH	25	40	●	●	●		●	●	●			●	●		●	●	●		●	●	●
Ammonium hydroxide	NH_4OH	25	60	●	●			●	●	●			●	●			●			●	●	●
Ammonium nitrate	NH_4NO_3	38	40	●		●		●	●	●	●	●	●	●		●	●	●	●	●	●	●
Ammonium nitrate	NH_4NO_3	38	60	●				●	●	●	●	●	●	●					●	●	●	●
Ammonium sulphate	$(NH_4)_2SO_4$	40	40	●		●		●	●	●	●	●	●	●			●	●	●	●	●	●
Ammonium sulphate	$(NH_4)_2SO_4$	40	60	●				●	●	●	●	●	●	●			●		●	●	●	●
Ammonium sulphide	$(NH_4)_2S$	55	20	●		●		●	●	●	●	●	●	●		●	●		●	●	●	●
Ammonium sulphide	$(NH_4)_2S$	55	40	●		●		●	●	●	●	●	●	●		●	●			●	●	●
Ammonium sulphide	$(NH_4)_2S$	55	60	●				●	●	●	●	●	●	●			●	●		●	●	●
Ammonium sulphite	$(NH_4)_2SO_3$	35	20	●		●		●	●	●	●	●	●	●		●			●	●	●	●
Ammonium sulphite	$(NH_4)_2SO_3$	35	40	●							●	●	●	●		●			●	●	●	●
Ammonium sulphite	$(NH_4)_2SO_3$	35	60	●							●	●	●	●					●	●	●	●
B																						
Barm		10	40	●		●	●	●	●	●	●	●	●	●		●	●	●	●	●	●	●
Barm		10	60	●				●	●	●	●	●	●	●			●	●	●	●	●	●
Benzine	C_5H_{12} ... $C_{12}H_{26}$	100	40		●	●				●	●	●	●	●		●			●	●	●	●
Benzine	C_5H_{12} ... $C_{12}H_{26}$	100	60		●						●	●	●	●					●	●	●	●
Benzine	C_5H_{12} ... $C_{12}H_{26}$	100	80		●						●		●	●						●		●
Benzine	C_5H_{12} ... $C_{12}H_{26}$	100	100		●								●	●						● 1)		●
Benzoic acid	C_6H_5-COOH	1	40	●		●		●	●	●	●	●	●	●		●			●	●	●	●
Benzoic acid	C_6H_5-COOH	1	60	●				●	●	●	●	●	●	●					●	●	●	●
Benzene	C_6H_6	100	20		●						●	●	●	●		●				●	●	●
Benzene	C_6H_6	100	40		●								●	●		●				●	●	●
Benzene	C_6H_6	100	60		●								●	●						●	●	●

5

© 2015 **sera GmbH**
Subject to technical modifications.

Chemical attack		Attributes				Chemical resistance (● = resistant)																	
Medium	Chemical formula	Concentration Gew. %	Temperature °C	Conductivity > 5µS/cm	Density < 1 g/cm³	PVC-U	PVC-transparent	PP	PP-FRP	PE	PVDF	PVDF-FRP	1.4571 / 1.4581	1.4401	1.4122v	Glass	EPDM	CSM	FPM	PTFE	PTFE-faced	FEP-coverd
Benzene	C_6H_6	100	80		●								●	●						●		●
Benzene	C_6H_6	100	100		●								●	●						●[1]		●
Benzyl alcohol	C_7H_8O	100	20					●	●	●	●	●	●	●		●	●			●	●	●
Benzyl alcohol	C_7H_8O	100	40					●	●	●	●	●	●	●		●				●	●	●
Benzyl alcohol	C_7H_8O	100	60							●	●	●	●	●						●	●	●
Beer		100	20	●		●	●	●	●	●	●	●	●			●	●	●	●	●	●	●
Beer		100	40	●		●	●	●	●	●	●	●	●			●				●	●	●
Beer		100	60	●				●	●	●	●	●	●							●	●	●
Beer		100	80	●							●		●							●[1]		●
Borax	$Na_2B_4O_7$	2	40	●		●		●	●	●	●	●	●	●		●	●	●	●	●	●	●
Borax	$Na_2B_4O_7$	2	60	●				●	●	●	●	●	●	●			●		●	●	●	●
Boric acid	H_3BO_3	20	40	●		●		●	●	●	●	●	●	●			●	●	●	●	●	●
Boric acid	H_3BO_3	20	60	●				●	●	●	●	●	●	●			●	●	●	●	●	●
Brandy		60	40	●		●		●	●	●	●	●	●	●		●	●	●	●	●	●	●
Brandy		60	60	●				●	●	●	●	●	●	●			●	●	●	●	●	●
Brandy		60	80	●							●		●	●			●			●		●
Bromine	Br_2	100	20								●								●	●	●	●
Bromine	Br_2	100	40								●									●[2]	●	●
Butanol	C_4H_9OH	100	40		●	●		●	●	●	●	●	●	●			●	●	●	●	●	●
Butanol	C_4H_9OH	100	60		●					●	●	●	●	●				●	●	●	●	●
Butanol	C_4H_9OH	100	80		●						●		●	●					●	●		●
Butanol	C_4H_9OH	100	100		●								●	●						●[1]		●
Butyric acid	$C_4H_8O_2$	20	20	●		●		●	●	●	●	●	●	●		●	●			●	●	●
Butyric acid	$C_4H_8O_2$	20	40	●						●	●	●				●	●			●	●	●
Butyric acid	$C_4H_8O_2$	20	60	●							●	●								●	●	●
Butyric acid	$C_4H_8O_2$	100	20					●	●	●	●	●	●	●		●				●	●	●
Butyric acid	$C_4H_8O_2$	100	40							●	●	●				●				●	●	●
Butyric acid	$C_4H_8O_2$	100	60								●	●								●	●	●
C																						
Calcium chloride	$CaCl_2$	40	40	●		●		●	●	●	●	●				●	●	●	●	●	●	●
Calcium chloride	$CaCl_2$	40	60	●				●	●	●	●	●					●	●	●	●	●	●
Calcium hypochlorite	$Ca(OCl)_2$	15	40	●		●										●	●	●	●	●	●	●
Calcium hypochlorite	$Ca(OCl)_2$	15	60	●													●			●	●	●
Calcium nitrate	$Ca(NO_3)_2$	50	40	●		●		●	●	●	●					●	●	●	●	●	●	●
Calcium nitrate	$Ca(NO_3)_2$	50	60	●				●	●		●						●	●	●	●	●	●
Chloroform	$CHCl_3$	100	40								●	●	●	●		●				●	●	●
Chlorine dioxyde	ClO_2	0,2	40	●		●	●												●	●[3]		
Chromic acid	CrO_3*H_2O	20	40	●		●					●	●				●			●	●	●	●
Chromic acid	CrO_3*H_2O	20	60	●							●	●								●	●	●
Chromic acid	CrO_3*H_2O	50	20	●							●	●							●	●	●	●
Chromic acid	CrO_3*H_2O	50	40	●							●	●							●	●	●	●
Chromic acid	CrO_3*H_2O	50	60	●							●	●							●	●	●	●
Citirc acid	$C_6H_8O_7$	40	20	●			●	●	●	●	●	●	●	●		●	●	●		●	●	●
Citirc acid	$C_6H_8O_7$	40	40	●		●		●	●	●	●	●				●	●	●		●	●	●
Citirc acid	$C_6H_8O_7$	40	60	●				●	●	●	●	●					●	●		●	●	●

© 2015 **sera GmbH**
Subject to technical modifications.

Chemical attack		Attributes				Chemical resistance (● = *resistant*)																
Medium	Chemical formula	Concentration Gew. %	Temperature °C	Conductivity > 5µS/cm	Density < 1 g/cm³	PVC-U	PVC-transparent	PP	PP-FRP	PE	PVDF	PVDF-FRP	1.4571 / 1.4581	1.4401	1.4122v	Glass	EPDM	CSM	FPM	PTFE	PTFE-faced	FEP-coverd
Copper chloride	CuCl	1,5	40	●		●	●	●	●	●	●	●				●	●	●	●	●	●	●
Copper chloride	CuCl	1,5	60	●							●	●					●		●	●	●	●
Copper sulphate	Cu_2SO_4	20	40	●		●	●	●	●	●	●	●	●	●		●	●	●	●	●	●	●
Copper sulphate	Cu_2SO_4	20	60	●				●	●	●	●	●	●	●			●		●	●	●	●
Cyclohexane	C_6H_{12}	100	20		●	●	●	●	●	●	●	●	●	●		●				●	●	●
Cyclohexane	C_6H_{12}	100	40		●	●				●	●	●	●	●		●				●	●	●
Cyclohexane	C_6H_{12}	100	60		●						●	●	●	●						●	●	●
D																						
Defoaming agent		100	40			●	●	●	●	●	●	●	●	●		●			●	●	●	●
Defoaming agent		100	60					●	●	●	●	●	●	●					●	●	●	●
Diesel		100	40			●					●	●	●	●		●			●	●	●	●
Diesel		100	60								●	●	●	●					●	●	●	●
Drinking water		100	40			●	●	●	●	●	●	●	●	●	●	●	●	●	●	●	●	●
Drinking water		100	60					●	●	●	●	●	●	●	●[7]		●	●	●	●	●	●
E																						
Edible oil		100	20		●	●	●	●	●	●	●	●	●	●	●	●			●	●	●	●
Edible oil		100	40		●	●	●	●	●		●	●	●	●	●	●			●	●	●	●
Edible oil		100	60		●						●	●	●	●	●				●	●	●	●
Ethyl alcohol		96	40		●	●		●	●	●	●	●	●	●		●	●	●		●	●	●
Ethyl alcohol		96	60		●			●	●	●			●	●			●			●	●	●
Ethyl alcohol		96	80		●								●	●			●			●		●
Ethyl alcohol		96	100		●								●	●						●[1]		●
Ethylenediamine		99	40		●											●						
Ethylenediamine		99	60		●			●	●	●							●			●	●	●
Ethylene glycol		100	40			●		●	●	●	●	●	●	●		●	●	●	●	●	●	●
Ethylene glycol		100	60					●	●	●	●	●	●	●			●	●	●	●	●	●
Ethylene glycol		100	80								●	●	●	●			●	●	●	●		●
Ethylene glycol		100	100										●	●			●	●	●	●[1]		●
F																						
Fatty acid	R-COOH	100	20		●	●		●	●		●	●	●	●		●			●	●	●	●
Fatty acid	R-COOH	100	40		●	●		●	●		●	●	●	●		●				●	●	●
Fatty acid	R-COOH	100	60		●						●	●	●	●						●	●	●
Ferric-II-chloride	$FeCl_2$	40	40	●		●	●	●	●	●	●	●				●	●	●	●	●	●	●
Ferric-II-chloride	$FeCl_2$	40	60	●				●	●	●	●	●					●	●	●	●	●	●
Ferric-III-chloride	$FeCl_3$	40	40	●		●	●	●	●	●	●	●				●	●	●	●	●	●	●
Ferric-III-chloride	$FeCl_3$	40	60	●				●	●	●	●	●					●	●	●	●	●	●
Ferric sulphate	$Fe_2(SO_4)_2$	20	40	●		●	●	●	●	●	●	●				●	●	●	●	●	●	●
Ferric sulphate	$Fe_2(SO_4)_2$	20	60	●				●	●	●	●	●					●	●	●	●	●	●
Ferric chloride sulphate	$FeClSO_4$	30	40	●		●	●	●	●	●	●	●				●	●	●	●	●	●	●
Ferric chloride sulphate	$FeClSO_4$	30	60	●				●	●	●							●	●	●	●	●	●
Flocculent aid		0,1	40	●		●	●	●	●	●	●	●	●	●		●			●	●	●	●
Flocculent aid		0,1	60	●				●	●	●	●	●	●	●		●			●	●	●	●
Formaldehyde	CH_2O	40	40	●		●		●	●	●	●	●	●	●		●	●	●	●	●	●	●
Formaldehyde	CH_2O	40	60	●				●	●	●	●	●	●	●			●		●	●	●	●
Formic acid	HCOOH	99	40	●						●	●	●	●	●		●	●	●		●	●	●

© 2015 **sera GmbH**
Subject to technical modifications.

Chemical attack		Attributes				Chemical resistance (● = resistant)																	
Medium	Chemical formula	Concentration Gew. %	Temperature °C	Conductivity > 5µS/cm	Density < 1 g/cm³	PVC-U	PVC-transparent	PP	PP-FRP	PE	PVDF	PVDF-FRP	1.4571 / 1.4581	1.4401	1.4122v	Glass	EPDM	CSM	FPM	PTFE	PTFE-faced	FEP-coverd
Formic acid	HCOOH	99	60	●						●	●	●	●	●						●	●	●
Formic acid	HCOOH	85	20	●		●		●	●	●	●	●	●	●		●	●	●		●	●	●
Formic acid	HCOOH	85	40	●						●	●	●	●	●		●	●	●		●	●	●
Formic acid	HCOOH	85	60	●						●	●	●	●	●						●	●	●
Formic acid	HCOOH	50	40	●		●		●	●	●	●	●	●	●		●	●	●		●	●	●
Formic acid	HCOOH	50	60	●				●	●	●	●	●	●	●						●	●	●
Fruit juice		100	40	●				●		●	●	●	●	●		●				●	●	●
Fruit juice		100	60	●				●		●	●	●	●	●						●	●	●
Fruit juice		100	80	●							●		●	●						● [1]		●
G																						
Gelatine		2	40	●		●	●	●	●	●	●	●	●	●		●	●	●	●	●	●	●
Gelatine		2	60	●				●	●	●	●	●	●	●						●	●	●
Gelatine		2	80	●									●	●						● [1]		●
Glucose	$C_6H_{12}O_6$	50	40	●		●	●	●	●	●	●	●	●	●		●	●	●	●	●	●	●
Glucose	$C_6H_{12}O_6$	50	60	●				●	●	●	●	●	●	●			●	●	●	●	●	●
Glucose	$C_6H_{12}O_6$	50	80	●									●	●					●	●		●
Glucose	$C_6H_{12}O_6$	50	100	●									●	●						●		●
Glycerine	$(CH_2OH)_2CHOH$	86,5	40			●	●	●	●	●	●	●	●	●		●	●	●	●	●	●	●
Glycerine	$(CH_2OH)_2CHOH$	86,5	60					●	●	●	●	●	●	●			●	●	●	●	●	●
Glycerine	$(CH_2OH)_2CHOH$	86,5	80								●		●	●					●	●	●	●
Glycerine	$(CH_2OH)_2CHOH$	86,5	100										●	●						● [1]		●
Glycol	$HO\text{-}C_2H_4\text{-}OH$	60	40	●		●	●	●	●	●	●	●	●	●		●	●	●	●	●	●	●
Glycol	$HO\text{-}C_2H_4\text{-}OH$	60	60	●				●	●	●	●	●	●	●			●	●	●	●	●	●
Glycol	$HO\text{-}C_2H_4\text{-}OH$	60	80	●							●		●	●						●		●
Glycol	$HO\text{-}C_2H_4\text{-}OH$	60	100	●									●	●						● [1]		●
Glycol acid	$HO\text{-}CH_2\text{-}COOH$	37	40	●		●		●	●	●	●	●				●	●	●	●	●	●	●
Glycol acid	$HO\text{-}CH_2\text{-}COOH$	37	60	●						●	●	●					●	●	●	●	●	●
H																						
Heating oil		100	20		●	●		●	●	●	●	●	●	●		●			●	●	●	●
Heating oil		100	40		●	●					●	●	●	●		●			●	●	●	●
Heating oil		100	60		●								●	●					●	●	●	●
Heptane	C_7H_{16}	100	20		●	●	●			●	●							●	●	●	●	●
Heptane	C_7H_{16}	100	40		●						●								●	●	●	●
Heptane	C_7H_{16}	100	60		●						●								●	●	●	●
Hexane	C_6H_{14}	100	20		●	●	●			●	●	●	●	●				●	●	●	●	●
Hexane	C_6H_{14}	100	40		●						●	●	●	●					●	●	●	●
Hydrazine	$H_2N\text{-}NH_2{*}H_2O$	15	40	●		●	●	●	●				●	●		●	●	●	●	●	●	●
Hydrazine	$H_2N\text{-}NH_2{*}H_2O$	15	60	●									●	●			●	●	●	●	●	●
Hydrobromic acid	HBr	48	40	●		●		●	●	●	●	●				●	●	●	●	●	●	●
Hydrobromic acid	HBr	48	60	●						●	●	●						●	●	●	●	●
Hydrochlorid acid	HCl	36	20	●		●	●	●	●	●	●	●				●	●		●	●	●	●
Hydrochlorid acid	HCl	36	40	●		●	●	●	●	●	●	●					●			●	●	●
Hydrochlorid acid	HCl	36	60	●							●	●								●	●	●
Hydrofloric acid	HF	40	20	●		●	●	●		●	●							●	●	●	●	●
Hydrofloric acid	HF	40	40	●				●		●	●							●	●	●	●	●

© 2015 **sera GmbH**
Subject to technical modifications.

Chemical attack		Attributes				Chemical resistance (● = resistant)																
Medium	Chemical formula	Concentration Gew. %	Temperature °C	Conductivity > 5µS/cm	Density < 1 g/cm³	PVC-U	PVC-transparent	PP	PP-FRP	PE	PVDF	PVDF-FRP	1.4571 / 1.4581	1.4401	1.4122v	Glass	EPDM	CSM	FPM	PTFE	PTFE-faced	FEP-coverd
Hydrofloric acid	HF	40	60	●							●									●	●	●
Hydrofloric acid	HF	70	20	●		●				●	●								●	●	●	●
Hydrofloric acid	HF	70	40	●							●									●	●	●
Hydrofloric acid	HF	70	60	●							●									●	●	●
Hydrogen peroxide	H_2O_2	10	20	●		●	●				●	●	●	●		●	●	●	●	●	●	●
Hydrogen peroxide	H_2O_2	30	20	●		●	●				●	●	●	●		●		●	●	●	●	●
Hydrogen peroxide	H_2O_2	50	20	●		●					●	●	●	●		●			●	●	●	●
Hydrosilicofluoric acid	H_2SiF_6	20	20	●		●		●		●	●		●	●				●		●	●	●
Hydrosilicofluoric acid	H_2SiF_6	20	40	●		●		●		●	●									●	●	●
Hydrosilicofluoric acid	H_2SiF_6	20	60	●				●		●	●									●	●	●
I																						
Iodine tincture		99	20								●	●	●	●						●	●	●
Iodine tincture		99	60								●	●								●	●	●
Isopropanol	$(CH_3)_2$-CH-OH	100	20		●	●		●	●	●	●	●	●	●		●	●	●	●	●	●	●
Isopropanol	$(CH_3)_2$-CH-OH	100	40		●			●	●	●	●	●	●	●		●	●	●	●	●	●	●
Isopropanol	$(CH_3)_2$-CH-OH	100	60		●			●	●	●	●	●	●	●			●	●		●	●	●
L																						
Lactic acid	$CH_3CHOCOOH$	10	20	●		●	●	●	●	●	●	●	●	●		●			●	●	●	●
Lactic acid	$CH_3CHOCOOH$	10	40	●		●		●	●	●	●	●	●	●		●				●	●	●
Lactic acid	$CH_3CHOCOOH$	10	60	●				●	●	●	●	●	●	●						●	●	●
Lactic acid	$CH_3CHOCOOH$	90	20	●		●		●	●	●	●	●	●	●		●				●	●	●
Lactic acid	$CH_3CHOCOOH$	90	40	●				●	●	●	●	●				●				●	●	●
Lactic acid	$CH_3CHOCOOH$	90	60	●				●	●	●										●	●	●
Lanolin		100	20		●	●		●	●	●	●	●	●	●		●			●	●	●	●
Lanolin		100	40		●			●	●	●	●	●	●	●		●			●	●	●	●
Lanolin		100	60		●						●	●	●	●					●	●	●	●
Linseed oil		100	20		●	●		●	●	●	●	●	●	●		●		●	●	●	●	●
Linseed oil		100	40		●			●	●	●	●	●	●	●		●			●	●	●	●
Linseed oil		100	60		●			●	●	●	●	●	●	●					●	●	●	●
M																						
Maleic acid	HOOC-CH=CH-COOH	40	20	●		●	●	●	●	●	●	●	●	●		●			●	●	●	●
Maleic acid	HOOC-CH=CH-COOH	40	40	●				●	●	●	●	●	●	●		●			●	●	●	●
Maleic acid	HOOC-CH=CH-COOH	40	60	●							●	●	●	●					●	●	●	●
Methanol	CH_3OH	100	40		●								●	●			●	●		●	●	●
Methyl acetate	CH_3COOCH_3	100	20		●								●	●						●	●	●
Methylene chloride	CH_2Cl_2	100	20										●	●		●				●	●	●
Mineral oil		100	20		●	●		●	●	●	●	●	●	●		●			●	●	●	●
Mineral oil		100	40		●						●	●	●	●		●			●	●	●	●
Mineral oil		100	60		●						●	●	●	●					●	●	●	●
Mineral oil		100	80		●								●	●					●	●		●
Mineral oil		100	100		●								●	●						●[1]		●
Morpholine		99	20					●	●	●	●	●	●	●		●				●	●	●
Morpholine		99	40					●	●	●			●	●		●				●	●	●
Morpholine		99	60					●	●	●			●	●						●	●	●

5

© 2015 **sera GmbH**
Subject to technical modifications.

Chemical attack		Attributes				Chemical resistance (● = resistant)																
Medium	Chemical formula	Concentration Gew. %	Temperature °C	Conductivity > 5µS/cm	Density < 1 g/cm³	PVC-U	PVC-transparent	PP	PP-FRP	PE	PVDF	PVDF-FRP	1.4571 / 1.4581	1.4401	1.4122v	Glass	EPDM	CSM	FPM	PTFE	PTFE-faced	FEP-coverd
N																						
Naphthalin	$C_{10}H_8$	0,02	20	●				●	●	●	●	●	●	●		●			●	●	●	●
Naphhtalin	$C_{10}H_8$	0,02	40	●							●	●	●	●		●			●	●	●	●
Naphthalin	$C_{10}H_8$	0,02	60	●							●	●	●	●					●	●	●	●
Nitrit acid	HNO_3	50	20	●		●	●				●	●	●	●					●	● 5)	●	●
Nitrit acid	HNO_3	50	40	●		●					●		●	●					●	●	●	●
Nitrit acid	HNO_3	50	60	●							●									● 6)	●	●
Nitrit acid	HNO_3	65	20	●							●		●	●					●	●	●	●
Nitrit acid	HNO_3	65	40	●																●	●	●
Nitrit acid	HNO_3	65	60	●																●	●	●
Nitrobenzene	$C_6H_4NO_2$	100	40					●	●	●	●	●	●	●						●	●	●
Nitrobenzene	$C_6H_4NO_2$	100	40					●	●		●	●	●	●						●	●	●
Nitrotoluene	CH_3-C_6H_4-NO_2	100	20					●	●	●	●	●	●	●		●				●	●	●
Nitrotoluene	CH_3-C_6H_4-NO_2	100	40								●	●	●	●		●				●	●	●
Nitrotoluene	CH_3-C_6H_4-NO_2	100	60								●	●	●	●						●	●	●
Nitrohydrochloric acid	HNO_3 + HCl - 3:1	100	60	●																●	●	●
O																						
Olive oil		100	40		●	●	●	●	●	●	●	●	●	●	●	●			●	●	●	●
Olive oil		100	60		●			●	●		●	●	●	●	●				●	●	●	●
Oxalic acid	$C_2H_2O_4$*$2H_2O$	8	20	●		●		●	●	●	●	●				●			●	●	●	●
Oxalic acid	$C_2H_2O_4$*$2H_2O$	8	40	●		●		●	●	●	●	●				●			●	●	●	●
Oxalic acid	$C_2H_2O_4$*$2H_2O$	8	60	●				●	●	●										●	●	●
P																						
Paraffin oil		100	40		●	●	●	●	●	●	●	●	●	●	●	●			●	●	●	●
Paraffin oil		100	60		●						●	●	●	●	●				●	●	●	●
Paraffin oil		100	100		●								●	●	●					● 1)		●
Perchlorethylen	$Cl_2C=CCl_2$	100	20								●	●	●	●		●			●	●	●	●
Perchlorethylen	$Cl_2C=CCl_2$	100	40								●	●	●	●		●			●	●	●	●
Perchlorethylen	$Cl_2C=CCl_2$	100	60										●	●					●	●	●	●
Perchloric acid	$HClO_4$	10	40	●		●					●	●	●	●		●	●	●	●	●	●	●
Perchloric acid	$HClO_4$	10	60	●							●	●	●	●			●		●	●	●	●
Perchloric acid	$HClO_4$	70	40	●							●	●	●	●		●	●	●	●	●	●	●
Perchloric acid	$HClO_4$	70	60	●							●	●	●	●			●		●	●	●	●
Peracetic acid	$CH_3CO(O_2H)$	5	20	●		●	●	●	●							●			●	●	●	●
Peracetic acid	$CH_3CO(O_2H)$	5	40	●				●	●				●	●		●			●	●	●	●
Peracetic acid	$CH_3CO(O_2H)$	35	20	●				●	●							●			●	●	●	●
Peracetic acid	$CH_3CO(O_2H)$	35	40	●									●	●		●			●	●	●	●
Petrol aether	C_5H_{12} / C_6H_{14}	100	20		●	●		●	●	●	●	●	●	●		●			●	●	●	●
Petrol aether	C_5H_{12} / C_6H_{14}	100	40		●	●					●	●	●	●		●			●	●	●	●
Petrol aether	C_5H_{12} / C_6H_{14}	100	60		●						●	●	●	●						●	●	●
Petroleum		100	20		●	●				●	●	●	●	●		●			●	●	●	●
Petroleum		100	40		●						●	●	●	●		●			●	●	●	●
Petroleum		100	60		●						●	●	●	●						●	●	●
Phenol	C_6H_5-OH	7	20	●		●		●		●	●	●	●	●		●			●	●	●	●
Phenol	C_6H_5-OH	7	40	●				●		●	●	●	●	●		●			●	●	●	●
Phenol	C_6H_5-OH	7	60	●				●	●		●	●	●	●					●	●	●	●

5

© 2015 **sera GmbH**
Subject to technical modifications.

Chemical attack		Attributes				Chemical resistance (● = *resistant*)																
Medium	Chemical formula	Concentration Gew. %	Temperature °C	Conductivity > 5µS/cm	Density < 1 g/cm³	PVC-U	PVC-transparent	PP	PP-FRP	PE	PVDF	PVDF-FRP	1.4571 / 1.4581	1.4401	1.4122v	Glass	EPDM	CSM	FPM	PTFE	PTFE-faced	FEP-coverd
Photo developer		100	40	●		●	●	●	●	●						●	●	●	●	●	●	●
Photo fixative bath		100	40	●		●	●	●	●	●						●	●	●	●	●	●	●
Phosphoric acid	H_3PO_4	50	40	●		●		●	●	●	●	●	●	●			●	●	●	●	●	●
Phosphoric acid	H_3PO_4	50	60	●				●	●	●	●	●	●	●			●	●	●	●	●	●
Phosphoric acid	H_3PO_4	85	20	●		●		●	●	●	●	●	●	●				●	●	●	●	●
Phosphoric acid	H_3PO_4	85	40	●		●		●	●	●	●	●						●	●	●	●	●
Phosphoric acid	H_3PO_4	85	60	●				●	●		●	●						●	●	●	●	●
Phtalic acid	$C_6H_4(CO_2H)_2$	0,5	20	●		●		●	●	●	●	●	●	●		●	●	●	●	●	●	●
Phtalic acid	$C_6H_4(CO_2H)_2$	0,5	40	●				●	●	●	●	●	●	●		●	●	●	●	●	●	●
Phtalic acid	$C_6H_4(CO_2H)_2$	0,5	60	●				●	●	●	●	●	●	●			●	●	●	●	●	●
Potassium bromide	KBr	45	40	●		●		●	●	●	●	●					●	●	●	●	●	●
Potassium bromide	KBr	45	60	●				●	●	●	●	●					●	●	●	●	●	●
Potassium carbonate	K_2CO_3	50	40	●		●		●	●	●			●	●			●	●	●	●	●	●
Potassium carbonate	K_2CO_3	50	60	●				●	●	●			●	●			●	●	●	●	●	●
Potassium chlorate	$KClO_3$	7	40	●		●					●	●	●	●		●	●	●	●	●	●	●
Potassium chlorate	$KClO_3$	7	60	●							●	●	●	●			●	●	●	●	●	●
Potassium chloride	KCl	30	40	●		●		●	●	●	●	●				●	●	●	●	●	●	●
Potassium chloride	KCl	30	60	●				●	●	●	●	●					●	●	●	●	●	●
Potassium chromate	K_2CrO_4	60	20	●				●	●													
Potassium chromate	K_2CrO_4	60	40	●		●				●	●	●				●	●	●	●	●	●	●
Potassium chromate	K_2CrO_4	60	60	●							●	●					●		●	●	●	●
Potassium cyanide	KCN	60	20	●															●			
Potassium cyanide	KCN	60	40	●		●		●	●	●			●	●			●	●		●	●	●
Potassium cyanide	KCN	60	60	●				●	●	●			●	●			●	●		●	●	●
Potassium hydroxide	KOH	50	40	●		●		●		●			●	●			●	●		●	●	●
Potassium hydroxide	KOH	50	60	●				●		●			●	●			●	●		●	●	●
Potassium hydroxide	KOH	50	100	●									●	●						●[1]		●
Potassium iodide	KJ	50	40	●		●		●	●	●	●	●	●	●		●	●	●	●	●	●	●
Potassium iodide	KJ	50	60	●				●	●	●	●	●	●	●			●	●	●	●	●	●
Potassium nitrat	KNO_3	20	40	●		●		●	●	●	●	●	●	●		●	●	●	●	●	●	●
Potassium nitrat	KNO_3	20	60	●				●	●	●	●	●	●	●			●	●	●	●	●	●
Potassium perchlorate	$KClO_4$	1,5	40	●		●					●	●	●	●		●	●	●	●	●	●	●
Potassium perchlorate	$KClO_4$	1,5	60	●							●	●	●	●			●	●	●	●	●	●
Potassium permanganate	$KMnO_4$	4	20	●		●				●	●		●	●		●	●	●	●	●	●	●
Potassium permanganate	$KMnO_4$	4	40	●		●							●	●		●	●	●	●	●	●	●
Potassium permanganate	$KMnO_4$	4	60	●									●	●			●	●	●	●	●	●
Potassium sulfate	K_2SO_4	6	40	●		●		●	●	●	●	●	●	●		●	●	●	●	●	●	●
Potassium sulfate	K_2SO_4	6	60	●				●	●	●	●	●	●	●			●	●	●	●	●	●
Propanol	C_3H_7OH	100	60		●			●	●	●	●	●	●	●			●		●	●	●	●
Propanoic acid	CH_3-CH_2COOH	50	20	●		●	●	●	●	●	●	●	●	●			●			●	●	●
Propanoic acid	CH_3-CH_2COOH	50	40	●		●	●	●	●	●	●	●	●	●			●			●	●	●
Propanoic acid	CH_3-CH_2COOH	50	60	●				●	●	●	●	●	●	●			●			●	●	●
Propanoic acid	CH_3-CH_2COOH	99,5	20	●		●	●	●	●	●	●	●	●	●			●			●	●	●
Propanoic acid	CH_3-CH_2COOH	99,5	40	●						●	●	●	●	●			●			●	●	●
Propanoic acid	CH_3-CH_2COOH	99,5	60	●							●	●	●	●						●	●	●

© 2015 **sera GmbH**
Subject to technical modifications.

Chemical attack		Attributes				Chemical resistance (● = resistant)																
Medium	Chemical formula	Concentration Gew. %	Temperature °C	Conductivity > 5µS/cm	Density < 1 g/cm³	PVC-U	PVC-transparent	PP	PP-FRP	PE	PVDF	PVDF-FRP	1.4571 / 1.4581	1.4401	1.4122v	Glass	EPDM	CSM	FPM	PTFE	PTFE-faced	FEP-coverd
Propylene glycol	$C_3H_8O_2$	99,7	20			●		●		●	●	●	●	●		●	●	●	●	●		●
Propylene glycol	$C_3H_8O_2$	99,7	40					●		●	●	●	●	●		●	●	●	●	●		●
Propylene glycol	$C_3H_8O_2$	99,7	60					●		●	●	●	●	●			●	●		●		●
S																						
Silicone oil		100	20		●	●	●	●	●	●	●	●	●	●	●	●		●	●	●	●	●
Silicone oil		100	40		●			●	●	●	●	●	●	●	●	●			●	●	●	●
Silicone oil		100	60		●			●	●	●	●	●	●	●	●				●	●	●	●
Sodium acetate	CH_3COONa	20	40	●		●		●	●	●	●	●	●	●		●	●		●	●	●	●
Sodium acetate	CH_3COONa	20	60	●				●	●	●	●	●	●	●			●		●	●	●	●
Sodium bicarbonate	$NaHCO_3$	8	40	●		●		●	●	●	●	●	●	●		●	●	●	●	●	●	●
Sodium bicarbonate	$NaHCO_3$	8	60	●				●	●	●			●	●			●	●	●	●	●	●
Sodium bisulfate	$NaHSO_4$	10	40	●		●		●	●	●	●	●	●	●		●	●	●	●	●	●	●
Sodium bisulfate	$NaHSO_4$	10	60	●				●	●	●	●	●	●	●			●		●	●	●	●
Sodium bisulphide	NaHS	30	20	●		●		●	●	●						●	●	●		●	●	●
Sodium bisulphide	NaHS	30	40	●												●	●	●		●	●	●
Sodium bisulphide	NaHS	30	60	●													●	●		●	●	●
Sodium bisulphite	$NaHSO_3$	40	20	●		●	●	●	●	●	●	●	●	●		●	●	●		●	●	●
Sodium bisulphite	$NaHSO_3$	40	40	●				●	●	●	●	●	●	●		●	●	●		●	●	●
Sodium bisulphite	$NaHSO_3$	40	60	●				●	●	●	●	●	●	●			●	●		●	●	●
Sodium bromate	$NaBrO_3$	20	20	●		●					●	●				●	●	●	●	●	●	●
Sodium bromate	$NaBrO_3$	20	40	●							●	●				●	●	●	●	●	●	●
Sodium bromate	$NaBrO_3$	20	60	●							●	●					●	●	●	●	●	●
Sodium bromide	NaBr	40	40	●		●		●	●	●	●	●				●	●	●	●	●	●	●
Sodium bromide	NaBr	40	60	●				●	●	●	●	●					●		●	●	●	●
Sodium carbonate	Na_2CO_3	15	20	●		●		●	●	●	●	●	●	●			●	●	●	●	●	●
Sodium carbonate	Na_2CO_3	15	40	●		●		●	●	●			●	●			●	●	●	●	●	●
Sodium carbonate	Na_2CO_3	15	60	●				●	●	●			●	●			●	●	●	●	●	●
Sodium chlorate	$NaClO_3$	40	40	●		●	●	●	●	●	●	●	●	●		●	●	●	●	●	●	●
Sodium chlorate	$NaClO_3$	40	60	●									●	●			●	●	●	●	●	●
Sodium chloride	NaCl	20	40	●		●	●	●	●	●	●	●				●	●	●	●	●	●	●
Sodium chloride	NaCl	20	60	●				●	●	●	●	●					●	●	●	●	●	●
Sodium chloride	NaCl	20	80	●													●		●	●	●	●
Sodium chlorite	$NaClO_2$	35	20	●		●					●	●				●	●	●	●	●	●	●
Sodium chlorite	$NaClO_2$	35	40	●							●	●				●	●	●	●	●	●	●
Sodium chlorite	$NaClO_2$	35	60	●													●	●	●	●	●	●
Sodium chromate	Na_2CrO_4	30	40	●		●					●	●				●	●	●	●	●	●	●
Sodium chromate	Na_2CrO_4	30	60	●							●	●					●		●	●	●	●
Sodium disulphite	$Na_2S_2O_5$	30	20	●		●		●	●	●	●	●				●	●	●	●	●	●	●
Sodium disulphite	$Na_2S_2O_5$	30	40	●		●					●	●				●	●	●	●	●	●	●
Sodium disulphite	$Na_2S_2O_5$	30	60	●							●	●					●	●	●	●	●	●
Sodium dithionite	$Na_2S_2O_4$	10	40	●		●		●	●	●	●	●				●	●	●	●	●	●	●
Sodium dithionite	$Na_2S_2O_4$	10	60	●				●	●	●	●	●					●	●	●	●	●	●
Sodium fluoride	NaF	4	20	●		●		●	●	●			●	●								
Sodium fluoride	NaF	4	40	●		●																
Sodium iodide	NaJ	50	20	●		●		●	●	●	●	●				●	●	●	●	●	●	●

© 2015 **sera GmbH**
Subject to technical modifications.

Chemical attack		Attributes				Chemical resistance (● = resistant)																	
Medium	Chemical formula	Concentration Gew. %	Temperature °C	Conductivity > 5µS/cm	Density < 1 g/cm³	PVC-U	PVC-transparent	PP	PP-FRP	PE	PVDF	PVDF-FRP	1.4571 / 1.4581	1.4401	1.4122v	Glass	EPDM	CSM	FPM	PTFE	PTFE-faced	FEP-coverd
Sodium iodide	NaJ	50	40	●							●	●				●	●	●	●	●	●	●
Sodium iodide	NaJ	50	60	●													●		●	●	●	●
Sodium hypochlorite	NaOCl	12,5	20	●		●	●									●	●	●	●	●	●	●
Sodium hypochlorite	NaOCl	12,5	40	●																●		●
Sodium nitrate	$NaNO_3$	40	40	●		●		●	●	●	●	●	●	●		●	●	●	●	●	●	●
Sodium nitrate	$NaNO_3$	40	60	●				●	●	●	●	●	●	●			●	●	●	●	●	●
Sodium nitrite	$NaNO_2$	7	40	●		●		●	●	●	●	●	●	●		●	●	●	●	●	●	●
Sodium nitrite	$NaNO_2$	7	60	●				●	●	●	●	●	●	●			●	●	●	●	●	●
Sodium persulphate	$Na_2S_2O_8$	30	40	●		●		●	●	●	●	●				●	●	●	●	●	●	●
Sodium persulphate	$Na_2S_2O_8$	30	60	●				●	●	●	●	●					●	●	●	●	●	●
Sodium phosphate	Na_3PO_4	2	40	●		●	●	●	●	●	●	●	●	●	●	●	●	●	●	●	●	●
Sodium phosphate	Na_3PO_4	2	60	●				●	●	●	●	●	●	●	●		●	●	●	●	●	●
Sodium silicate	Na_2SiO_3	34	20	●				●	●	●	●	●	●	●			●	●	●	●	●	●
Sodium silicate	Na_2SiO_3	34	40	●		●	●	●	●	●	●	●	●	●			●	●	●	●		●
Sodium silicate	Na_2SiO_3	34	60	●				●	●	●			●	●			●	●	●	●		●
Sodium sulphate	Na_2SO_4	45	40	●		●	●	●	●	●	●	●	●	●		●	●	●	●	●	●	●
Sodium sulphate	Na_2SO_4	45	60	●				●	●	●	●	●	●	●				●	●	●	●	●
Sodium sulphide	Na_2S	30	20	●		●	●	●	●	●			●	●			●	●		●	●	●
Sodium sulphide	Na_2S	30	40	●		●	●	●	●	●			●	●			●	●		●	●	●
Sodium sulphide	Na_2S	30	60	●				●	●	●			●	●			●	●		●	●	●
Sodium sulphite	Na_2SO_3	15	40	●		●		●	●	●	●	●	●	●		●	●	●	●	●	●	●
Sodium sulphite	Na_2SO_3	15	60	●				●	●	●	●	●	●	●			●	●	●	●	●	●
Sodium thiosulfate	$Na_2S_2O_3$	17	20	●		●	●	●	●	●	●	●	●	●		●	●	●	●	●	●	●
Sodium thiosulfate	$Na_2S_2O_3$	17	40	●		●	●	●	●	●	●	●	●	●		●	●	●	●	●	●	●
Sodium thiosulfate	$Na_2S_2O_3$	17	60	●				●	●	●	●	●	●	●			●	●	●	●	●	●
Sodium hydroxide	NaOH	5	40	●		●	●	●	●	●	●	●	●	●	●		●	●		●	●	●
Sodium hydroxide	NaOH	50	20	●		●	●	●	●	●			●	●			●	●		●	●	●
Sodium hydroxide	NaOH	50	40	●		●	●	●	●	●			●	●			●			●	●	●
Sodium hydroxide	NaOH	50	60	●				●	●				●	●						●	●	●
Sodium hydroxide	NaOH	50	80	●									●	●						●		●
Styrol	$CH_2CHC_6H_5$	100	20		●								●	●						●[1)]		●
Succinic acid	$HOOC\text{-}C_2H_4\text{-}COOH$	5	40	●		●		●	●	●	●	●	●	●		●	●	●	●	●	●	●
Succinic acid	$HOOC\text{-}C_2H_4\text{-}COOH$	5	60	●				●	●	●	●	●	●	●			●	●	●	●	●	●
Sugar sirup		60	40	●		●	●	●	●	●	●	●	●	●		●	●	●		●	●	●
Sugar sirup		60	60	●				●	●	●	●	●	●	●			●	●	●	●	●	●
Sulphoric acid	H_2SO_4	5	40	●		●		●	●	●	●	●	●	●		●	●	●	●	●	●	●
Sulphoric acid	H_2SO_4	5	60	●				●	●	●	●	●	●	●			●		●	●	●	●
Sulphoric acid	H_2SO_4	40	40	●		●		●	●	●	●	●				●	●	●	●	●	●	●
Sulphoric acid	H_2SO_4	40	60	●				●	●	●	●	●					●		●	●	●	●
Sulphoric acid	H_2SO_4	80	20	●		●		●	●	●	●	●				●	●	●	●	●	●	●
Sulphoric acid	H_2SO_4	80	40	●		●		●	●	●	●	●				●			●	●	●	●
Sulphoric acid	H_2SO_4	80	60	●							●	●								●	●	●
Sulphoric acid	H_2SO_4	96	20	●		●							●	●					●[6)]	●	●	●
Sulphoric acid	H_2SO_4	96	40	●									●	●		●				●	●	●
Sulphoric acid	H_2SO_4	96	60	●							●	●								●	●	●

5

© 2015 sera GmbH
Subject to technical modifications.

Chemical attack		Attributes				Chemical resistance (● = *resistant*)																
Medium	Chemical formula	Concentration Gew. %	Temperature °C	Conductivity > 5µS/cm	Density < 1 g/cm³	PVC-U	PVC-transparent	PP	PP-FRP	PE	PVDF	PVDF-FRP	1.4571 / 1.4581	1.4401	1.4122v	Glass	EPDM	CSM	FPM	PTFE	PTFE-faced	FEP-coverd
Sulphorous acid	H_2SO_3	6	20	●		●	●	●	●	●	●	●				●	●		●	●	●	●
Sulphorous acid	H_2SO_3	6	40	●		●	●	●	●	●	●	●				●			●	●	●	●
Sulphorous acid	H_2SO_3	6	60	●				●	●	●	●	●								●	●	●
T																						
Tall oil		100	60								●	●	●	●						●	●	●
Tannic acid	$C_{76}H_{52}O_{46}$	100	40	●		●		●	●	●	●	●	●	●		●	●	●	●	●	●	●
Tannic acid	$C_{76}H_{52}O_{46}$	100	60	●				●	●	●	●	●	●	●			●	●	●	●	●	●
Tinn chloride (II)	$SnCl_2$	60	20	●													●					
Tinn chloride (II)	$SnCl_2$	60	40	●		●	●	●	●	●	●	●				●		●	●	●	●	●
Tinn chloride (II)	$SnCl_2$	60	60	●				●	●	●	●	●						●	●	●	●	●
Turpentine oil		100	20		●	●					●	●	●	●		●				●	●	●
Turpentine oil		100	40		●								●	●		●				●	●	●
Turpentine oil		100	60		●								●	●					●	●	●	●
Toluene	$C_6H_5\text{-}CH_3$	100	20		●						●	●	●	●		●				●	●	●
Toluene	$C_6H_5\text{-}CH_3$	100	40		●						●	●	●	●		●				●	●	●
Toluene	$C_6H_5\text{-}CH_3$	100	60		●						●	●	●	●						●	●	●
U																						
Urea	$H_2N\text{-}CO\text{-}NH_2$	30	40	●		●	●	●	●	●	●	●	●	●		●	●	●	●	●	●	●
Urea	$H_2N\text{-}CO\text{-}NH_2$	30	60	●				●	●	●	●	●	●	●			●	●	●	●	●	●
V																						
Vinyl acetate	$CH_2{=}CHOOCCH_3$	100	20		●			●	●	●			●	●		●	●	●	●	●	●	●
Vinyl acetate	$CH_2{=}CHOOCCH_3$	100	40		●					●			●	●		●				●	●	●
X																						
Xylol	$C_6H_4(CH_3)_2$	100	20		●						●	●	●	●						●	●	●
Xylol	$C_6H_4(CH_3)_2$	100	60		●						●	●	●	●						●		●
Z																						
Zinc chloride	$ZnCl_2$	70	40	●		●	●	●	●	●	●	●				●	●	●	●	●	●	●
Zinc chloride	$ZnCl_2$	70	60	●				●	●	●	●	●					●	●	●	●	●	●
Zinc sulphate	$ZnSO_4$	20	40	●		●	●	●	●	●	●	●	●	●		●	●	●	●	●	●	●
Zinc sulphate	$ZnSO_4$	20	60	●				●	●	●	●	●	●	●			●	●	●	●	●	●

[1] Pump body and valves max. 60°C
[2] Not appropriated as valve balls because of the density
[3] Only appropriated as material for valve balls
[4] Not appropriated as material for intermidate diaphragm
[5] Not appropriated as material for working diaphragm or intermediate diaphragm / diaphragms up to 40-percent or 20°C
[6] Not appropriated as material for working diaphragm or intermediate diaphragm
[7] Chloride concentration max. 200 mg/l

Notes to the sera resistance chart:

Concentration data is given in percentage of weight for aqueous solution.
The data has been taken from relevant manufacturer's documentation and our own tests. Resistance of materials is also dependant on other factors, e.g. operating conditions, conditions of surface etc., and so this chart must be treated as an initial guide only. It cannot claim to offer any guarantees. It should be taken into conderation in particular that unusual dosing media are compounds for the most part, and their corrosiveness cannot be deducted simply by adding the corrosiveness of each single component. In such cases the chemical producer's data of the material compatibility are to be conisdered as a matter of prime importance for the material choice. A safety data sheet does not give these data and therefore cannot take the place of the technical documentaion on the application

© 2015 **sera GmbH**
Subject to technical modifications.

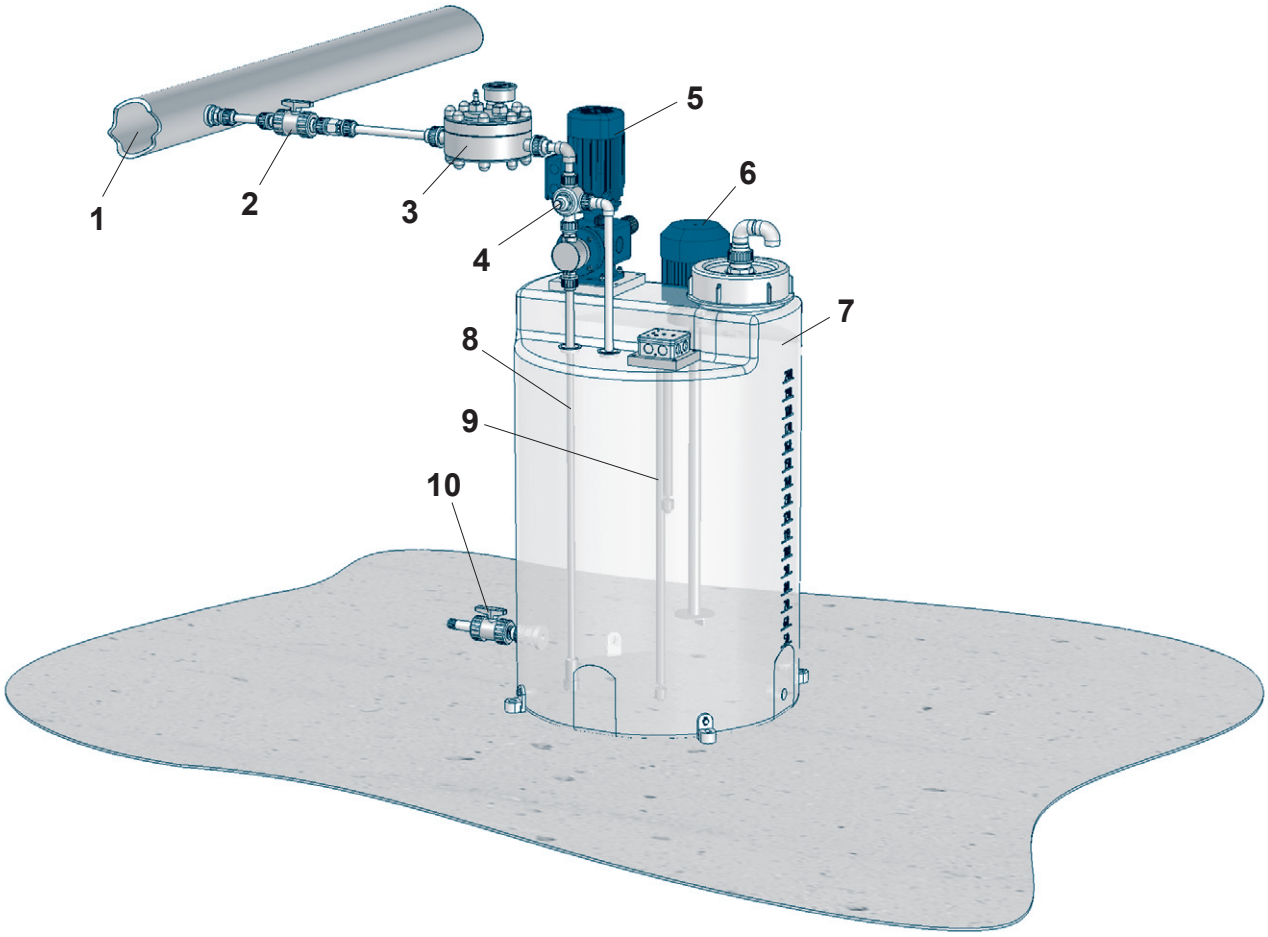

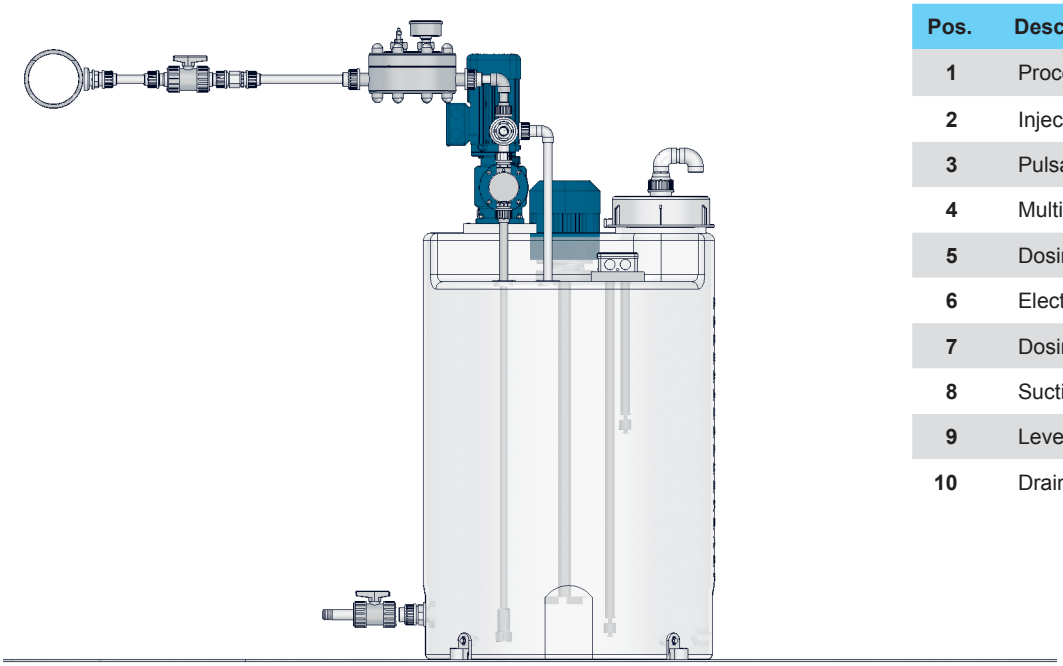

Pos.	Description
1	Process line
2	Injection fittings
3	Pulsation damper
4	Multi-function valve
5	Dosing pump
6	Electric agitator
7	Dosing tank
8	Suction lance
9	Level switch
10	Drain cock (tank evacuation)

© 2015 **sera GmbH**
Subject to technical modifications.

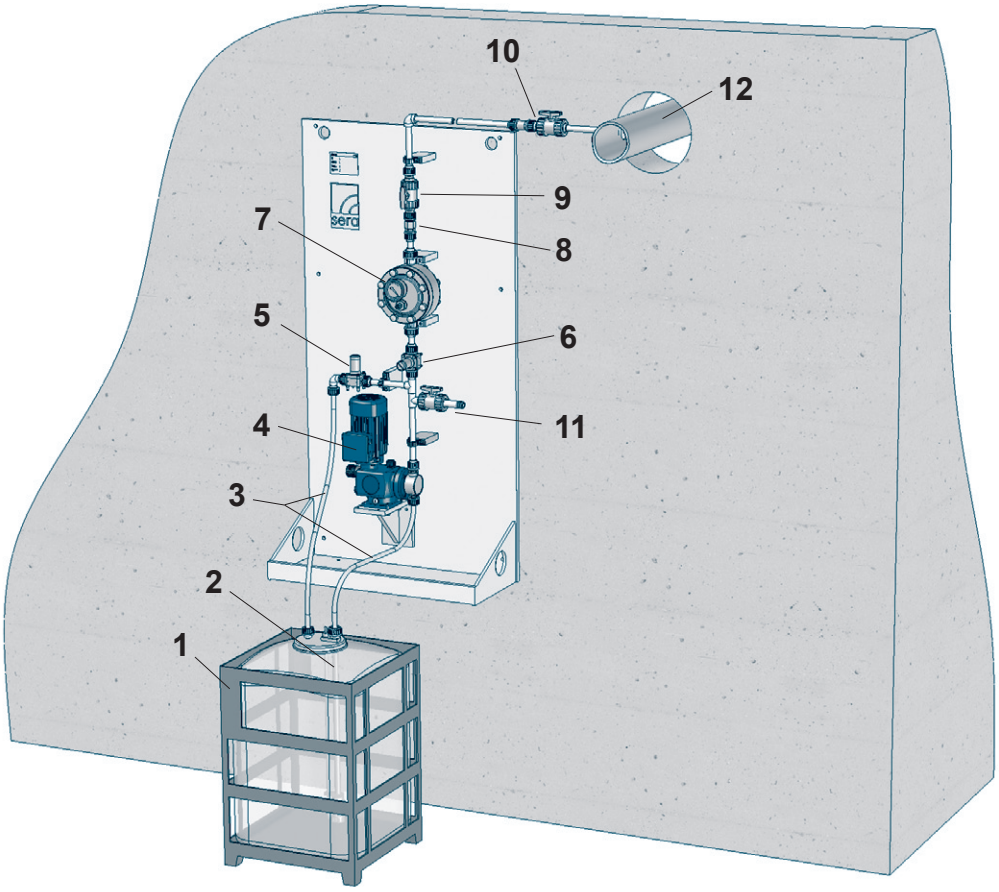

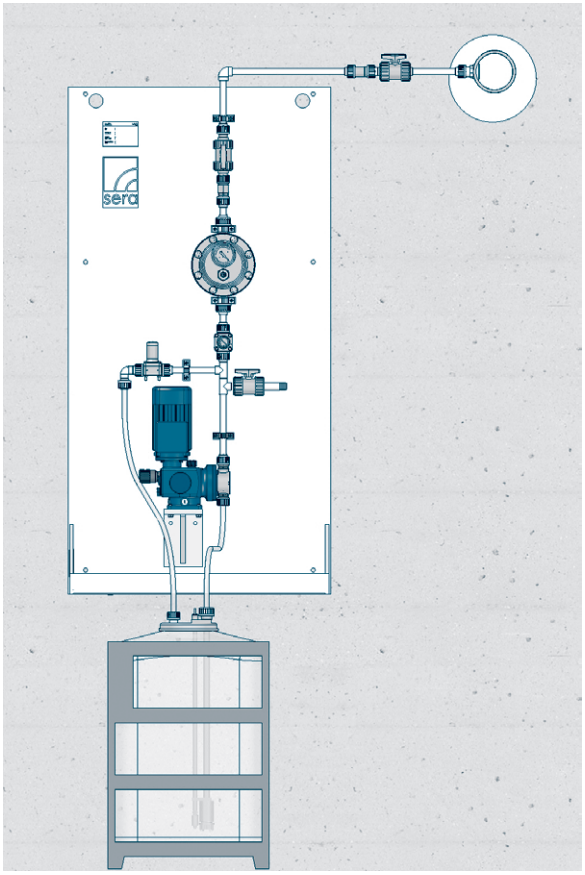

Pos.	Description
1	Chemical tank
2	Suction lance
3	Dosing hose
4	Dosing pump
5	Relief valve
6	Pressure-keeping valve
7	Pulsation damper
8	Check valve
9	Shut-off valve
10	Injection fitting
11	Evacuation and pressure relief valve
12	Process line

© 2015 **sera GmbH**
Subject to technical modifications.

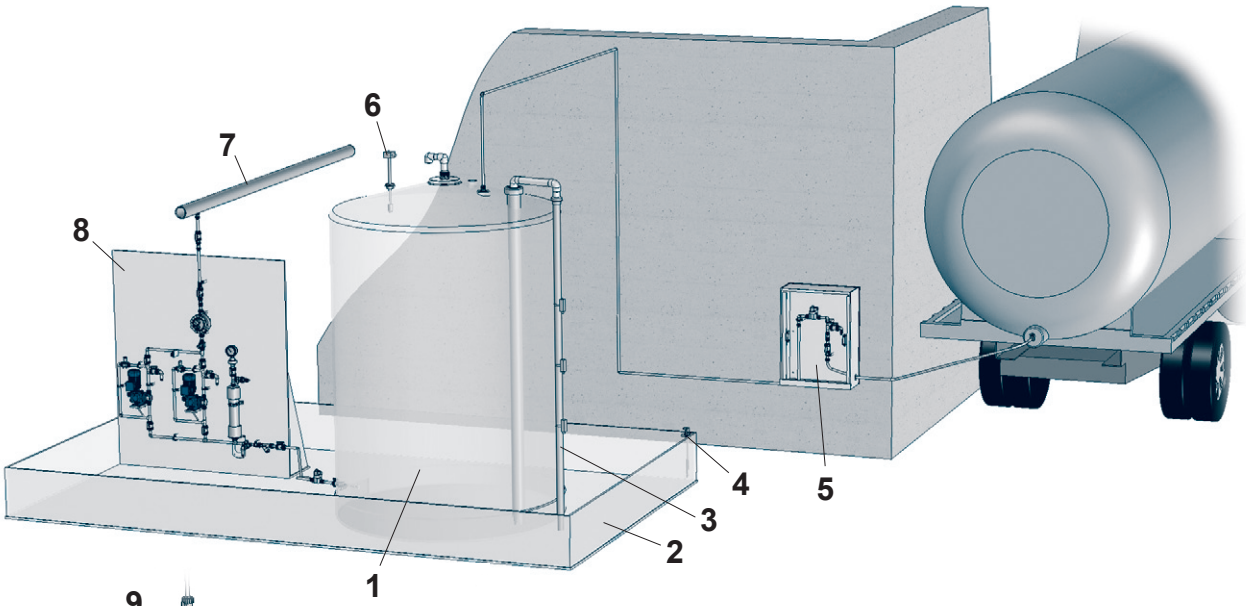

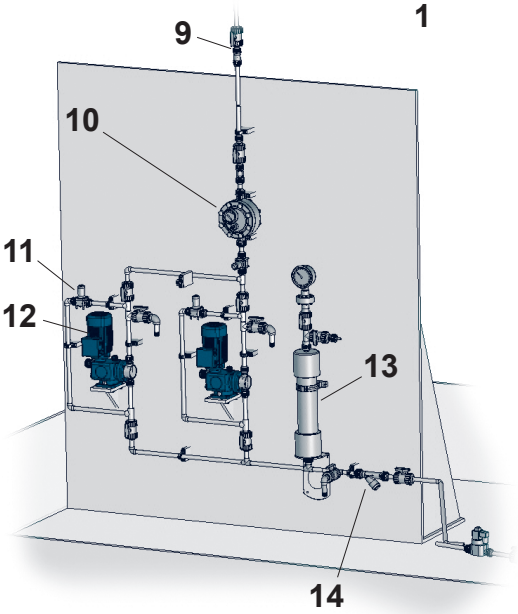

Pos.	Desciption
1	Storage tank
2	Collecting basin
3	Level indicator
4	Leakage probe
5	Filling cabinet
6	Overfilling protection
7	Process line

Pos.	Description
8	Dosing pallet (base mounting)
9	Injection fitting
10	Pulsation damper (on the pressure side)
11	Relief valve(s)
12	Dosing pumps(s)
13	Pulsation damper (on the suction side)
14	Line strainer

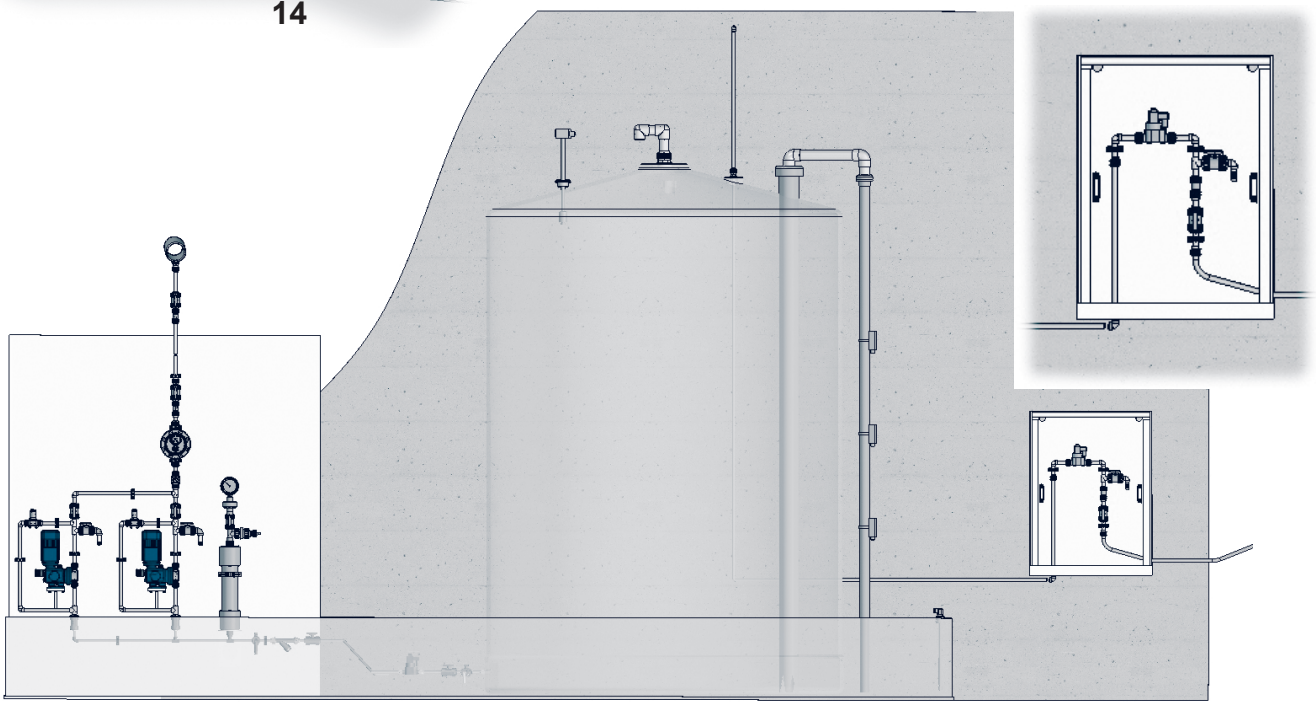

© 2015 **sera GmbH**
Subject to technical modifications.

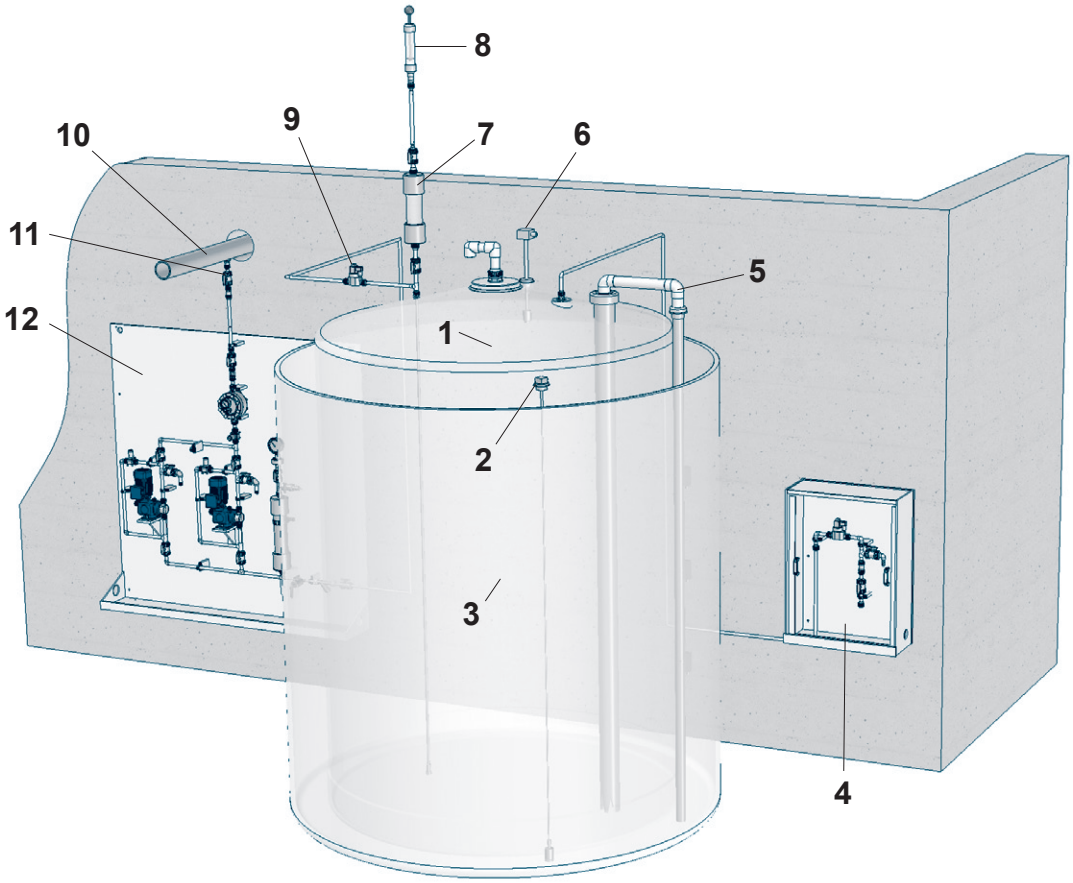

Pos.	Desciption
1	Storage tank
2	Leakage probe
3	Collecting basin
4	Filling cabinet
5	Level indicator
6	Overfilling protection

Pos.	Desciption
7	Siphon vessel
8	Hand vacuum pump
9	Automatic-fitting
10	Process line
11	Injection fitting
12	Dosing pallet (wall mounting)

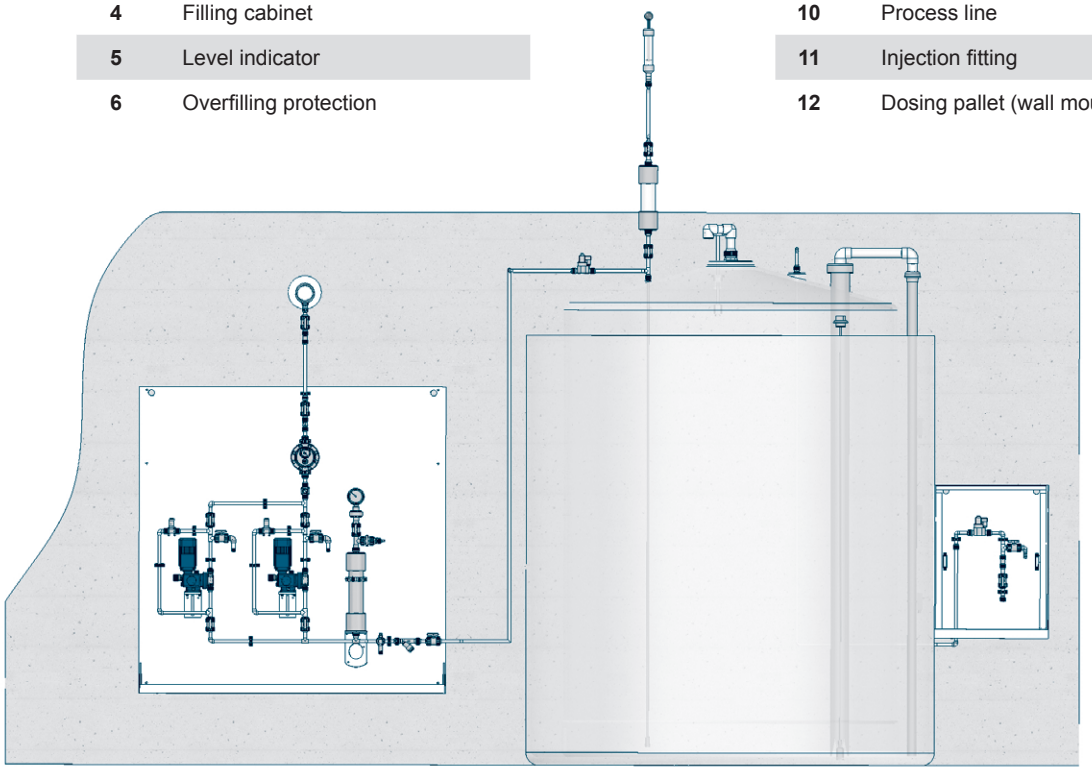

© 2015 **sera GmbH**
Subject to technical modifications.

In general

sera products from the current **sera** catalogues are supplied with a product documentation that contains the following standard:

1. User's information:
- Operating instructions (series)
- Dimensional drawings (only for information)
- Component list (list of parts)

2. Quality documentation:
- Inspection certificate covering pump test
- Declaration of conformity
- Declaration of manufacturer
- Testing certificate / Certficates
- (optionally acc. to specifiction)

Language and quantity

The documentation is made in German or English language one-folded.

Documentation in another language and multiple copies can be delivered on request.

Customized designs

Documentations for **sera** products which are disigned as variation or product combinations from this product-catalogue are delivered as composed documentation.

Used products and components are documented as above mentioned.

Construction data

Drawings true to scale for **sera** products as data sheet or drawing can be made on request.

External products

If available, product documentation of external products will be added in original, one-folded and according to our specification for documentation.

Documentation specification

Product documentation according to the customer's specification can be made on request.

Electronic design

sera product documentation can be changed to electronic data (pdf-file) on request and can be send on data medium or per e-mail.

sera construction data can be changed to electronic data (dxf-file) on request and can be send on data medium or per e-mail.

Download

There is appropiate information (technical data sheets and operating manuals) about our range of products on the **sera** homepage www.sera-web.com for download!

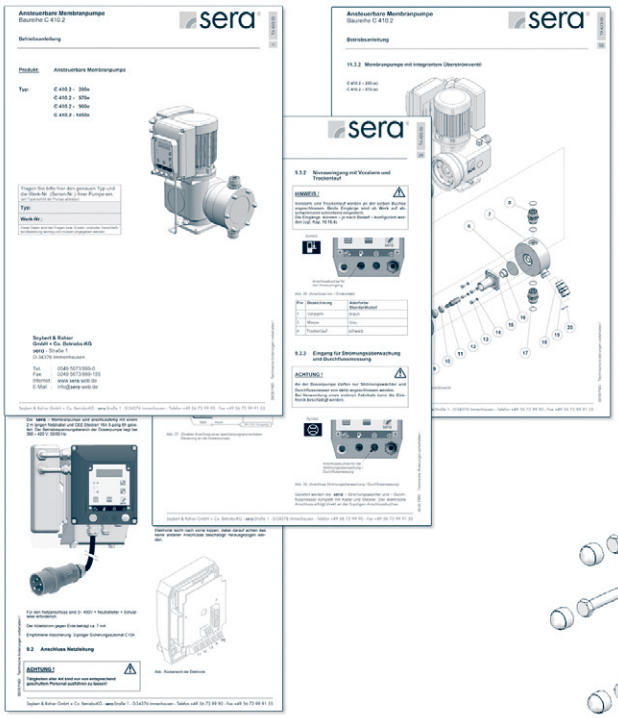

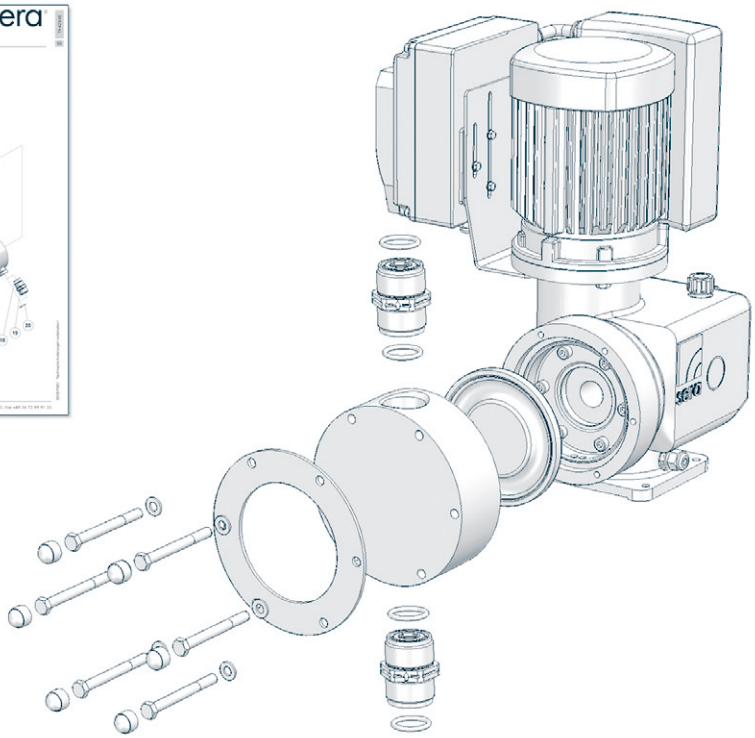

© 2015 **sera GmbH**
Subject to technical modifications.

1. General Provisions and Scope of Application

(1) These General Terms and Conditions (hereinafter "GTC") apply exclusively. The Supplier (hereinafter "**sera**") shall not be bound by any other diverging or conflicting terms and conditions of the Buyer unless **sera** expressly acknowledges in writing that such terms and conditions shall apply. These GTC shall apply for any subsequent orders and the supply of spare parts without the requirement for further notices and references. The same shall apply for amendments of already existing agreements.

(2) Subsidiary agreement, warranties and representations as well as changes or amendments whatsoever must be made in writing and agreed in order to be valid.

2. Offers and Order Confirmation

(1) In principle, our offers are subject to confirmation.

(2) Offers are only binding if a period of acceptance has been stipulated. All orders are subject to the written consent and approval of **sera**.

(3) **sera** reserves the ownership rights and copyrights to illustrations, drawings, calculations and other offer-related documents, including similar data in tangible or intangible form or in an electronic format; they may not be made accessible to third parties and require the express written approval of **sera** before forwarding them to third parties and must be returned to **sera** immediately, if no order will be issued to **sera** and so requested by **sera**.

(4) Supporting documents such as illustrations, drawings, calculations, descriptions, and performance, weight and dimensional data should be regarded as non-binding information only, unless they have been explicitly referred to as binding.

3. Scope of Supply and/or Services

(1) Supplies and Services are agreed by both parties in writing. If no agreement has been declared, the written order confirmation and these GTC of **sera** shall apply. In the case of sales agreements, the agreed delivery clauses are to be understood in accordance with the applicable Incoterms valid at the date of the closing of the contract.

(2) Unless otherwise agreed, costs for arranged erection and assembly, including all necessary incidental costs such as travel or transport costs for tools or personal baggage, are to be separately paid for by the Buyer.

(3) Partial deliveries are allowed to the extent that they have been agreed between **sera** and the Buyer or can be considered reasonable taking into account the interests of both parties.

(4) The duties of **sera** as regards deliveries abroad are subject to the granting of required export licenses.

(5) Any information given in brochures, catalogs or general technical documents shall be binding only if expressly referenced in writing.

(6) The Buyer shall be granted a non-exclusive right to use any software supplied within the scope of supply and services. The Buyer may duplicate or process the software only to the extent permissible by law.

4. Packing

Shipments are always packed with standard packaging items of **sera**.

sera is entitled to choose the required type of packing at its own discretion. Any related costs are the responsibility of the Buyer.

5. Deadlines for Supply and Services

(1) Deadlines shall require the mutual written consent of the parties or a written order confirmation by **sera**. Compliance with deadlines for deliveries and services presumes timely receipt of all supporting documents to be provided by the Buyer as well as the submission of necessary authorizations and releases, in particular, drawings and plans, and compliance with the agreed terms of payment and other duties of the Buyer.

(2) The delivery period commences with the final technical and commercial acceptance.

(3) If these prerequisites are not fulfilled in a timely manner, the deadline will be extended accordingly, unless the delay is attributable to **sera**.

(4) The agreed delivery periods shall be extended accordingly, if their non-compliance is due to force majeure such as war, mobilization, civil disorder or similar events, e.g. strike or lockout.

(5) If the agreed services do not include erection and assembly, the deadline is met, if the operational goods have been dispatched or collected within the agreed delivery or performance time limit. If shipment is delayed on account of circumstances attributable to the Buyer, the term for delivery is deemed met when a notice is issued that the shipment is ready for dispatch within the agreed term.

(6) If the Buyer demands the amendment of technical or commercial contract terms after **sera** has indicated delivery deadlines, such periods of time shall be prolonged accordingly, without the needs for further notices by **sera**.

(7) If the Buyer requests delayed shipment or delivery of more than a month after a notice has been issued that the shipment is ready for dispatch, the Buyer may be charged storage costs of 1 % of the invoice value of the goods according to the sales contract. The parties to the contract are at liberty of furnish proof of higher or lower storage costs.

(8) **sera** is entitled to immediately suspend delivery and the performance of operating contracts, if (i) the Buyer declares insolvency or enters into settlement procedures, (ii) the Buyer has sworn an affidavit in accordance with Section 807 ZPO (German Code of Civil Procedure) or (iii) the financial position of the Buyer has significantly deteriorated.

(9) **sera** is in default, if the agreed delivery deadline is exceeded and the Buyer has notified **sera** accordingly in writing.

(10) If **sera** is responsible for the non-compliance with the agreed delivery date and the Buyer has suffered actual losses, the Buyer shall be entitled to claim default interest at 0.25% for each completed week up to a total of 5% of the contract value of the deliveries or services which could not be put to the intended use due to the delay.

(11) Further claims for compensation of the Buyer that exceed the above limits shall be excluded in all cases of delivery default or late performance. This shall also apply, if a grace period set by **sera** has expired.

The above shall not apply in the event of liability due to deliberate acts, gross negligence and bodily harm.

(12) The Buyer's right to cancellation upon futile expiration of grace periods granted by **sera** remains unaffected, if attributable to **sera**.

The grace period must be reasonable and be at least four weeks.

6. Prices, Conditions and Terms of Payment

(1) All prices shall be in EURO unless otherwise stated. For supply transactions, prices are "ex works" (EXW), excluding packaging. The prices do not include any sales tax (VAT).

(2) Shipping costs are at the expense of the receiver and/or Buyer. Packaging costs are calculated separately. Packing materials are not taken back.

(3) The deduction of cash discounts shall require a separate written agreement.

(4) Notwithstanding any other provisions stipulated in the order confirmation, the purchase price shall be paid net (without any deductions) within thirty (30) days from the date of invoice.

(5) In the event that the Buyer is in default of its payment obligations, the Buyer is obliged to pay default interest at a rate of 6 percentage points above the applicable base interest rate pursuant to Section 288 (2) and Section 247 BGB (German Civil Code). Any further damage claims are reserved.

(6) Payments shall be regarded as received on the day the funds are at the disposal of **sera**.

(7) Unless otherwise agreed, Supplies to be delivered abroad require the issuance of an irrevocable letter of credit by the Buyer in favor of **sera**, which is confirmed by a German bank.

(8) In the event of payment default, **sera** is entitled to notify the Buyer in writing of its intention to suspend the performance until the receipt of payments.

(9) The Buyer may set off claims or assert a right of retention only if such claims are either indisputable or legally binding.

(10) A minimum net order value of EURO 75.00, excluding VAT is required on all orders accepted by **sera**. Any order below this value will be subject to a EURO 35.00 net handling fee.

© 2015 **sera GmbH**
Subject to technical modifications.

7. Transfer of Risk

Irrespective whether the deliveries were made free of charge, the risk of loss and of deterioration of the Supplies and Services provided by **sera** shall pass to the Buyer as follows:

(1) If the Supplies do not include assembly or erection, including partial deliveries, at the time when the Supplies are shipped or picked up.

(2) In principle, at the latest when leaving the factory of **sera**.

(3) If the Supplies include erection or assembly, at the day of acceptance at the Buyer's premises or, if so agreed, after a fault-free trial run.

(4) The risk shall immediately pass on to the Buyer if dispatch, shipping, the start or performance of erection or assembly, the acceptance in the Buyer's premises or the trial run is delayed for reasons attributable to the Buyer or if the Buyer has otherwise failed to accept the Supplies.

The same shall apply if the Delivery Items have not been shipped yet and are still located at the factory of **sera**.

8. Insurance

Upon request and at the expense of the Buyer, Supplies by **sera** shall be insured against the usual risks of transport. If such insurance has been taken out, **sera** shall be immediately notified of any damages during transit.

9. Retention of Title

(1) **sera** retains title to all Delivery Items until all claims for payment against the Buyer under the business relationship including any future receivables against the Buyer in connection with the goods subject to retention of title have been settled.

(2) The retention of title applies also to confirmed trade balances to the extent that **sera** accounts receivables against the Buyer in a current account.

(3) Permissible claims for retention of title, in particular if a claim is enforced by redemption of goods, in the case of default or if our ownership rights are at risk, shall not constitute rescission of the contract.

(4) **sera** is entitled to cancel the contract immediately without notice, if Delivery Items are taken back.

Any proceeds from the sale of Delivery Items, which **sera** has taken back, shall be credited to the Buyer's payment liability minus appropriate depreciation and disposal costs.

(5) The Buyer's rights to resale, use or the installation of deliveries to which title has been retained, shall cease upon the suspension of payments, application for insolvency or opening of bankruptcy proceedings or other judicial or extrajudicial settlement proceedings.

(6) **sera** shall then be entitled to immediately demand the return of the goods subject to retention of title. The assertion of a right of retention shall be excluded.

(7) The Buyer agrees that any person authorized by **sera** with the collection of goods to be picked up, may be granted access to the premises and the building where the collectable goods are located. Without prejudice to the payment obligation of the Buyer, **sera** is, in principle, entitled to sell or auction off returned goods at its own discretion.

(8) **sera** is entitled to cancel the contract immediately without notice, if Delivery Items are seized or pledged. In the event of an attachment order or any other intervention by a third party, the Buyer shall notify **sera** in writing and without delay so that **sera** can arrange for the order to be rescinded under the provisions of Section 771 ZPO (German Code of Civil Procedures). To the extent that the third party is unable to reimburse the legal costs or out-of-court costs incurred by **sera** under the provisions of Section 771 ZPO, the Buyer shall be liable for such costs.

(9) The Buyer shall be entitled to resell the Delivery Items as part of its normal course of business but transfers to **sera** here and now all claims to payments that the Buyer may have against its clients or third parties from such resale, up to the amount of the invoice value (including VAT), regardless of whether or not the Delivery Items have been further processed before being resold. The Buyer shall remain authorized to collect these claims, even after the assignment. The Buyer has no rights whatsoever to any other disposal, in particular pledging or the assignment as collateral.

(10) The right of **sera** to collect the claim itself remains unaffected. However, **sera** is not entitled to collection as long as the Buyer fulfills its payment obligations without being in default. If this is the case, **sera** shall have the right to require the Buyer to inform **sera** of its assigned receivables and the respective debtors, to provide all information necessary for collecting payment, to surrender all related documents, and to inform its debtors (third parties) of the assignment.

Any processing or conversion of the Delivery Items by the Buyer shall always be deemed to have been carried out on behalf of **sera**. If the Delivery Items are processed together with other items which are not **sera**'s property, **sera** shall be deemed to have acquired co-ownership over the new items in the same proportion (pro rata) as the value of the Delivery Items to the value of the other processed items at the time of processing. Any items created by such processing shall then be subject to the same restrictions as all other goods supplied under retention of title. The Buyer shall also transfer its claim to payment to **sera** as collateral for **sera**'s receivables against the Buyer which the Buyer may have against a third party due to the combination of the Delivery Items with a parcel of land.

(11) If the Delivery Items are processed together with other items which are not **sera**'s property and form new items which are combined inseparably, **sera** shall be deemed to have acquired co-ownership over the new items in the same proportion (pro rata) as the value of the Delivery Items to the value of the other combined items at the time of combination. If the combination is carried out with the result that the Buyer's product is regarded as the main component, it is hereby agreed that the Buyer shall transfer co-ownership rights pro rata to **sera**. The Buyer is obliged to store said property on behalf of **sera**. The Buyer shall insure said property against normal risks such as fire, theft and water damages at the usual rates. The Buyer hereby cedes its claims to damages from the above-mentioned risks against insurance companies or other parties liable for damages to **sera** in proportion to his receivables.

10. Warranty and Defects in Quality

(1) All Supplies or services by **sera** showing a defect in quality within the statutory period of limitation as they do not comply with agreed specifications or are not suitable for the intended or agreed purpose, shall be reworked, replaced or be provided again free of charge within the statutory period of limitation and at the discretion of **sera**, provided that the cause of the defect was already present at the time of passing of risk.

(2) The Buyer shall notify **sera** immediately in writing of any defects found as a result of circumstances prior to the transfer of risk.

(3) **sera** shall first be given the opportunity to cure the defect by supplementary performance within a reasonable period of time. The Buyer shall give **sera** the opportunity and required time span to do so. If the Buyer refuses to comply with this provision, **sera** shall be relieved of any liability for the defect.

(4) If supplementary performance fails, the Buyer shall be entitled to withdraw from the contract or reduce the remuneration, without prejudice to any claims for damages. The Buyer is not entitled to claim reimbursement of futile expenses.

(5) The warranty period shall be twelve months from commissioning (single shift operation of up to 8 hours daily) and is limited to fourteen months after the transfer of risks (see Section 7). Multi-shift operation shall reduce the warranty period accordingly. The warranty period of the initial delivery shall apply for rework or supplied replacement parts. Above provisions shall not apply to claims and rights, for which the law specifies longer mandatory periods in accordance with Section 438 (1) 2 BGB (German Civil Code) (building materials), Section 479 (1) BGB (recourse) and in accordance with § 634 a BGB (construction defects).

In appropriate cases, the warranty period may be extended up to a maximum of 60 months, if the Buyer has entered a maintenance agreement for the corresponding period with **sera**.

(6) Claims based on defects in cases of insignificant deviations from the agreed or presumed quality, of only minor impairment of usefulness, of natural wear and tear or damages arising after the transfer of risk from faulty or negligent handling, excessive strain, unsuitable equipment or replacement material, faulty construction work or unsuitable site conditions or from particular external influences not assumed under the contract, unfavorable chemical, electrochemical or electrical effects, adverse weather conditions or unsuitable operating conditions, faulty assembly or commissioning by the Buyer or third parties, non-compliance of the instruction manual provided by **sera** as well as due to non-reproducible software errors, are excluded.

In addition, the Buyer is not entitled to demand the defect to be rectified if the defect is attributable to the following causes: Inappropriate or incomplete statement of works and/or description of services or instructions issued by the Buyer; materials or components supplied or stipulated by the Buyer.

(7) Claims based on defects attributable to improper modifications or repair work carried out by the Buyer or third parties and the consequences thereof shall be likewise excluded. In this case, the warranty provided by **sera** ceases with immediate effect.

(8) **sera** shall not assume additional costs of travel and transport, labor and material, to the extent that expenses are increased because the Delivery Items were subsequently brought to another location than the Buyer's branch office or the original site, unless doing so complies with the intended use of the Supplies.

© 2015 **sera GmbH**
Subject to technical modifications.

(9) The Buyer is always obliged to take all reasonable steps to keep expenses for subsequent performance as low as possible. **sera** shall share any recall costs only if required according to the factual and legal situation. The Buyer is obliged to return defective products to **sera** or, at the discretion of **sera**, to make such products accessible for inspection and examination.

(10) The Buyer's right of recourse against **sera** is limited to cases where the Buyer has not concluded an agreement with its customers exceeding the scope of the statutory provisions governing claims based on defects. Moreover, above Section 10.8 shall apply mutatis mutandis to the scope of the right of recourse the Buyer may have against **sera**.

(11) The Buyer's claim for damages or reimbursement of expenses based on breach of obligations or any other legal reason shall be excluded. The above limitation shall not apply in the event of liability under statutory regulations for damages to life and limb, bodily injury, or harm to health.

(12) Furthermore, the provisions of Section 12 (other claims for damages) shall apply to any claims for damages. Any other claims of the Buyer against **sera** or its agents or any such claims exceeding the claims provided for in this Section 10 shall be expressly excluded.

(13) The warranty provided by **sera** for legitimate claims within the Federal Republic of Germany covers the repair of defective parts in our plant or the delivery of replacement parts.

(14) Outside of the Federal Republic of Germany, the warranty obligations of **sera** are restricted to the delivery of replacement parts. Replaced parts become our property.

11. Guarantee and Product Description

(1) Guarantee provisions are only binding if they are given in written form.

(2) Information provided in catalogs, offers and other printed matter as well as general advertising statements do not constitute an offer to enter into a warranty agreement.

12. Other Claims for Damages

(1) Any claims for damages and reimbursement of expenses the Buyer may have for any reason whatsoever, including infringement of contractual obligations and claim in tort, shall be excluded.

(2) For all products having a network connection, the risk of loss or alteration of data and the risk of faulty data transmission shall pass to the Buyer at the first network interface point of the product.

In the case of software, the risk of loss or alteration of data and the risk of faulty data transmission shall pass to the Buyer upon installation of the software.

Despite careful monitoring of data, **sera** assumes no liability for data which are transmitted over an open network interface or other systems into the Buyer's system.

(3) The above shall not apply in the case of mandatory liability, e.g. under the German Product Liability Act (Produkthaftungsgesetz), in the case of intent, gross negligence, injury of life, body or health, or breach of material obligations hereunder.

However, claims for damages arising from a breach of material contractual obligations shall be limited to the foreseeable damage with contracts of this type, unless caused by intent or gross negligence or arising from liability for injury of life, body or health or an express assurance has been given in relation to the existence of a particular property. The above provisions do not imply a change in the burden of proof to the detriment of the Buyer.

(4) Unless longer periods of limitations are prescribed by statutory law, all claims for damages shall lapse after the periods stipulated under Section 10.5.

13. Industrial Property Rights and Copyright, Defect of Title

(1) Unless otherwise agreed, **sera** shall provide the Supplies free from third parties' industrial property rights and copyrights (hereinafter referred to as "industrial property rights") in the country of delivery only.

(2) If a third party asserts a justified claim against the Buyer based on an infringement of industrial property rights with respect to the Supplies made by **sera** and then used in conformity with the contract, **sera** shall be liable to the Buyer within the time period stipulated in Section 10.5 as follows:

a) **sera**, at its discretion and at its own expense, is entitled to secure a license for the Supplies concerned or modify such Supplies so that no industrial property rights are violated or replace such Supplies. If this would be unreasonable to demand from **sera**, the Buyer may withdraw from the contract or reduce the remuneration pursuant to the applicable statutory provisions. The Buyer is not entitled to claim reimbursement of futile expenses.

b) **sera**'s liability to pay damages shall be governed by Section 12.

c) The above obligations of **sera** shall only apply if the Buyer (i) immediately notifies **sera** of any such claim asserted by the third party in writing, (ii) does not concede the existence of an infringement and (iii) leaves any protective measures and settlement negotiations to the discretion of **sera**. If the Buyer ceases to use the Supplies in order to reduce the damage or for other good reason, the Buyer shall be obliged to inform the third party that no acknowledgement of the alleged infringement may be inferred from the fact that the use has been discontinued.

(3) Claims of the Buyer shall be excluded to the extent that the infringement of an industrial property right is attributable to the Buyer. Claims of the Buyer shall also be excluded if the infringement of the industrial property right is caused by specifications made by the Buyer, to a type of use not foreseeable by **sera** or to the Supplies being modified by the Buyer or being used together with products not provided by **sera**.

(4) Otherwise, with respect to claims by the Buyer pursuant to Section 13.2 (a) above, the provisions of Section 10.3 and 10.10 shall apply mutatis mutandis in the event of an infringement of an industrial property right. Where other defects in title occur, Section 10 shall apply likewise. Any other claims or further claims of the Buyer against **sera** or its agents than claims provided for in this Section 13 based on a defect of title shall be expressly excluded.

14. Impossibility of Performance, Revision of Contract

(1) If the delivery is impossible to **sera**, the Buyer is entitled to claim damages, unless the impossibility of performance is not attributable to **sera**. The Buyer's claim for damages shall, however, be limited to an amount of 10 % of the value of the part of the Supplies which, owing to the impossibility, cannot be put to the intended use. The above shall not apply in the event of statutory liability due to deliberate acts, gross negligence and bodily harm. This does not imply a change in the burden of proof to the detriment of the Buyer. The Buyer's right to withdraw from the contract shall remain unaffected.

(2) Section 6 (deadlines for Supplies and services) shall apply in the event that the impossibility is of a temporary nature.

(3) If unforeseeable events for the purposes of Section 6.4 above substantially change the economic importance or the contents of the Supplies or considerably affect **sera**'s business, the contract shall be adapted taking into account the principles of reasonableness and good faith. Where doing so is economically unreasonable, **sera** is entitled to withdraw from the contract. If **sera** intends to exercise its right to cancel the contract, it shall notify the Buyer thereof without undue delay after having realized the repercussions of the event; this shall also apply even where an extension of the delivery period had previously been agreed with the Buyer.

15. Repair Terms

(1) The Buyer (customer) undertakes to issue a legally binding declaration of decontamination whereby the devices or parts that are to be repaired or maintained will be subject to an expert cleaning, in order to exclude any risk of recontamination to the contractor and/or **sera**.

The devices shall be shipped to **sera** free of all flammable, poisonous, caustic, harmful, irritant or otherwise unhealthy materials.

The declaration of decontamination must be fixed to the outside of the shipment container of the devices. Is the shipment is not accompanied by a declaration of decontamination, **sera** may refuse the acceptance of the shipment.

(2) Products and parts which are send to **sera** for the purposes of repairs, shall be sent "Free Works" and must be accompanied by a delivery note or packing docket. Prior to any shipment, a shipping advice stating the order number shall be sent to **sera**.

(3) The Buyer may be charged with the costs incurred in preparing cost estimates irrespective of the fact, whether a repair order is issued thereafter or not. The Buyer is charged with the costs incurred in troubleshooting if an order can not be carried out due to the following reasons:

a) The claimed defect was not detected using state-of-the-art rules;

b) the order has been cancelled during troubleshooting.

(4) The period of warranty for all work services (repairs) and anyreplaced and/or installed material is 6 months. Otherwise, the warranty terms for Supplies and Services stipulated under Section 10 shall apply.

(5) The terms of payment under Section 5 shall apply.

Furthermore, the following retention of title is agreed:

© 2015 **sera GmbH**
Subject to technical modifications.

a) As far as the spare parts or other components fitted during repairs do not become essential components, the contractor retains the ownership to such installed parts until all of the contractor's receivables arising from the contract have been paid in full.

b) **sera** may demand from the Buyer to surrender the item for the purpose of removal of the installed parts, if the buyer is in default o or does otherwise not comply with its obligations under the retention of title, The Buyer shall bear the full costs of redemption and removal.

c) If the repairs are taking place at the Buyer's premises, the Buyer shall give **sera** the opportunity to carry out the removal at the Buyer's premises. Labor and travel expenses shall be borne by the Buyer.

(6) If the Buyer is considered a merchant, venue for all disputes arising from the contract is the place of **sera**'s registered office. However, **sera** is also entitled to file a lawsuit at the Buyer's registered office.

16. Erection and Assembly

Erection, assembly and installation of devices and equipment of **sera** shall be carried out by specialists in compliance with the guidelines of **sera** and the relevant technical norms only.

Unless otherwise agreed in writing, erection and/or assembly by **sera** shall be subject to the following provisions:

(1) The Buyer shall assume at its expense the following costs and provide the following in due time:

a) all earth and construction work and other ancillary work outside the scope of the industry, including the necessary skilled and unskilled labor, construction materials and tools,

b) equipment and materials necessary for assembly and commissioning such as scaffolds, lifting equipment and other devices as well as fuels, lubricants and chemicals.

c) energy and water at the point of use, including connections, heating and lighting,

d) suitable dry and lockable rooms of sufficient size adjacent to the site for the storage of machine parts, apparatus, materials, tools, etc. and adequate working and recreation rooms for the assembly personnel, including sanitary facilities as are appropriate in the specific circumstances. Otherwise, the Buyer shall take all measures to protect **sera**'s property and the assembly personnel on site as it would take for the safeguarding of its own property.

e) Any required protective clothing and guards due to particular conditions prevailing on the specific site.

(2) Before the commencement of assembly works, the Buyer shall make available any information required concerning the location of hidden electric power, gas and water lines or of similar installations as well as the necessary structural data.

(3) Prior to erection or assembly, the materials and equipment necessary for the commencement of works must be available on site and any preparatory work must have advanced to such a degree that erection/assembly may commence as agreed and carried out without interruption. Access roads and the erection/assembly site itself must be level and clear.

(4) The Buyer shall be obliged to pay for the reasonable costs incurred for idle times and any additional travelling of assembly personnel, if erection, assembly or commissioning is delayed due to circumstances not attributable to **sera**.

(5) The Buyer shall provide proper storage in accordance with the guidelines of **sera**,

if the installation of equipment can not commence immediately after delivery.

(6) The Buyer shall attest to the hours worked by the assembly personnel at weekly intervals and shall confirm in writing and without undue delay once erection, assembly or commissioning has been completed.

(7) Commissioning may be carried out by technicians authorized by **sera** and according to **sera**'s regulations only. The technicians are entitled to refuse the commissioning of equipment if the operating conditions to be provided by the Buyer do not allow for safe operation. The Buyer has to bear all costs incurred by **sera** due to the delay in commissioning.

(8) If, after completion, **sera** demands the acceptance of the Supplies and Services, the Buyer shall comply within two weeks. In default thereof, acceptance is deemed to have taken place after the expiration of this period of time. Likewise, acceptance is also deemed to have been effected if the Supplies and Services are put to use after completion of an agreed test phase, if any, or have been put into service or operation by the Buyer.

17. Place of Performance, Venue, Applicable Law

(1) Place of Performance for all obligations of the Seller (**sera**) and the Buyer is **sera**'s registered office, if the Buyer is considered a merchant.

(2) If the Buyer is considered a merchant, venue for all disputes arising from the contract is the place of **sera**'s registered office. However, **sera** is also entitled to file a lawsuit at the Buyer's registered office.

(3) The law of the Federal Republic of Germany shall apply exclusively.

(4) The United Nations Convention on Contracts for the International Sale of Goods (CISG) shall be excluded.

18. Severability

The invalidity of individual provisions and conditions of this contract shall have no effect on the validity of the remaining provisions. If a provision is invalid either in part or in whole, the parties to the contract shall immediately endeavor to achieve the intended economic purpose of the invalid provision by other, legally permitted means.

sera ProDos GmbH
sera-Straße 1
34376 Immenhausen
Germany

www.sera-web.com

© 2015 **sera GmbH**
Subject to technical modifications.

1. General Provisions and Scope of Application

(1) All of the works carried out by our service personnel are subject to cost rates. Works which are performed for a fixed price and/or abroad do not fall under these rates and require special agreements.

(2) Any requirement for special licenses (e.g., SCC, nuclear power plant permits) by **sera** service personnel shall be notified by the Client in the request for quotation. Unless otherwise agreed in writing, any costs which are incurred to obtain such special licenses are at the expense of the Client.

(3) These Special Terms and Conditions shall apply in addition to our GTC (General Terms and Conditions) as amended.

2. Client Collaboration

Client shall support the service personnel in the implementation of the works at its own costs. Client shall take all necessary measures to protect persons and equipment.

Client, at its expense, shall be obliged to provide technical assistance, in particular:

(1) Provision of unskilled labor (assistants), if required. Such assistants shall follow the instructions of the service personnel at all times. **sera** does not assume any liability for any assistants or their services.

(2) Completion of all necessary construction and installation works.

(3) Provision of heating, lighting, power and water, including the required connections.

(4) Provision of required devices and heavy tools/machinery.

(5) Provision of adequate lockable rooms for the service personnel to store tools and clothing.

(6) Transportation of devices to the assembly site and protection of all parts and materials from damages of any kind.

The technical assistance of the Client shall ensure that the works may be commenced immediately following the arrival of the service personnel and are carried out without delay up to the Client's acceptance.

3. Working Hours

(1) Normal working hours are from Monday to Friday and shall total 40 hours.

The works may be carried out in daily time slots of up to 8 hours as follows: Monday – Friday, 07:00 – 18:00.

(2) Service personnel shall try to adapt to the working hours of the Client.

4. Travel Times, Lead Times and Waiting Times

These times are charged as normal working time with overtime surcharges from the eighth hour.

5. Hourly Rates

(1) Service technicians (Mo-Fr):
EURO 76.00 plus VAT.

(2) Engineers, chemists and physicists (Mo-Fr):
EURO 96.00 plus VAT.

(3) We shall update the rates in case of tariff changes.

6. Overtime surcharges (plus VAT) for Works performed on Sundays and Public Holidays as well as Works performed under Special Circumstances

- For the first 2 hours of overtime per day: 25 %
- Any extra hours overtime and work performed after 20:00: 50 %
- Overtime on Sundays: 75 %
- Overtime on public holidays: 100 %

Public holidays are the legal holidays in Germany and any other legal holidays applicable to the assembly site.

7. Accommodation Allowance (plus VAT)

- Domestic: For each day or part thereof (including travel days): EURO 24.00
- Abroad: Country-specific (on request)

Accommodation allowance is also charged for the duration of a disability caused by illness or accident at the assembly site.

8. Accommodation Expenses

Accommodation expenses are charged for actual expenses incurred.

9. Travel Expenses

(1) Travel expenses of **sera** service personnel are charged for trips to and from the place of work, including local transport, etc. In principle, costs for rail travel in 2nd class are charged (plus surcharges).

(2) If motor vehicles are used, the following rates apply (plus VAT):

Applicable rates: 0.75 EURO for each kilometer

(3) **sera** reserves the right to choose the means of transportation at its own discretion.

10. Incidental Costs

For necessary telephone calls, telegrams and such, actual costs shall be charged (plus VAT).

11. Work Logs

(1) Our service logs are used as basis for invoicing. Among other things, work and travel time, works carried out as well as kilometer driven, are entered into these logs.

(2) All works performed by **sera** service personnel must be signed off by the Client, irrespective of whether such works have to be paid by the Client or are regarded as warranty services. If this has not been carried out, the log book entries made by the service personnel shall apply.

12. Warranty and Limitations of Liability

(1) Following acceptance of the assembly works, **sera** is liable for any defects of assembly occurring within 6 months thereof if such defects are notified in writing.

(2) **sera** shall fulfill its warranty obligation by either performing repairs or replacement. Any further warranty claims, e.g. consequential damages or indirect damages, shall be excluded.

(3) For any damages and defects not directly related to the delivered item or service performed, **sera** shall be liable only for willful or gross negligence attributable to its officers or in case of bodily harm where defects have been fraudulently concealed.

(4) No liability shall apply if the Client has made changes or repairs to delivery items or performed works without the written approval of **sera**.

13. Terms of Payment

Unless otherwise agreed, costs incurred shall be payable immediately upon receipt of invoice. The same shall apply to partial and interim settlements.

14. Venue and Applicable Law

(1) If the Client is considered a merchant, venue for all disputes arising from the contract is the place of **sera**'s registered office. However, **sera** is also entitled to file a lawsuit at the Client's registered office.

(2) The law of the Federal Republic of Germany shall apply exclusively.

(3) The United Nations Convention on Contracts for the International Sale of Goods (CISG) shall be excluded.

15. Severability

The invalidity of individual provisions and conditions of this contract shall have no effect on the validity of the remaining provisions. If a provision is invalid either in part or in whole, the parties to the contract shall immediately endeavor to achieve the intended economic purpose of the invalid provision by other, legally permitted means.

sera ProDos GmbH
sera-Straße 1
34376 Immenhausen
Germany

www.sera-web.com

© 2015 **sera GmbH**
Subject to technical modifications.